Front Cover

OKIDATA

Service Guide

OKIFAX 5050 / 5300 / 5600
FACSIMILE PRODUCTS

Adobe Acrobat printable reference copy
of the OKIDATA Service Training Manual.
05/07/98

Note: This Adobe Acrobat version of the Okidata Service Training Manual was built with the pictures rendered at 300 dpi, which is ideal for printing, but does not display well on most displays.

OKIDATA has taken care to insure that the information is complete, accurate and up-to-date. However, OKIDATA assumes no responsibility for errors or omissions which may occur. All the information provided is subject to change from time to time at the sole discretion of OKIDATA.

Table of Contents	Page

Service Manual for OF5300/5600

0 About This Manual

Read Me First 1
Copyright 2
OKIFAX 5050 Service Authorization 3
OKIFAX 5050 ADDENDUM to OKIFAX 5300/5600 Service Manual 4

1 General Information

1.1 General Performance 6
1.2 General User's Function 7
1.3 General Maintenance Functions 8
1.4 General Appearance 9
1.5 Basic Performance Specifications (Table 1.5.1) 10
1.6 Reports and Lists (Table 1.6.1) 11
....Call-back Message (Example) 12
....Sender ID Format: (Example) 13
....TSI Printing (Example) 14
....Power Outage Report (Example) 15
....Activity Report (Example) 16
....Message Confirmation Report 17
....Broadcast Entry Report (Example) 18
....Confidential Reception Report (Example) 19
....Broadcast Confirmation Report (Example) 20
....Confidential Reception Report (Example) 21
....Telephone Directory for OKIFAX 5300 22
....Telephone Directory for OKIFAX 5600 23
....Configuration Report (User) [Service Bit OFF] 24
....Configuration Report (Service) [Service Bit ON] 25

2 Installation Procedures

2.1 General 26
2.2 Site Selection Title of Chapter 27
2.3 Unpacking 28
2.4 Check of Contents 29
2.5 Installation of Attachments 30
2.6 AC Cord Connection 31
2.7 Telephone and Line Connections 32
2.8 Packing for Shipment 33
2.9 Initial Settings 34
....2.9.1 Key Operation Flowchart (Figure 2.9.1) 35
....2.9.2 Technical Functions 36
.....Table 2.9.2 37
.....TAD Mode (Technical Function 07) 38
.....TEL/FAX Automatic Switching (Technical Function 09) 39

Table of Contents	Page

....2.9.3 Technical Functions Example 40
.....Technical Functions 01 to 11 (Table 2.9.2) 41
.....Technical Functions 12 to 16 (Table 2.9.2) 42
.....Technical Functions 17 to 23 (Table 2.9.2) 43
.....Technical Functions 24 to 27 (Table 2.9.2) 44
.....Technical Functions 28 to 31 (Table 2.9.2) 45
....2.9.4 User's Functions 46
.....Feature Specifications (Table 2.9.3): 47
.....Dual Access Combination Table (1/2) 48
.....Dual Access Combination Table (2/2) 49
.....2)-1 One-Touch Key Program Settings 50
.....One-Touch Key Program Settings (Table 2.9.4) 51
.....2)-2 Function Program 52
....2.9.5 User's Functions Example 53
.....User's Functions (Table 2.9.5) 54
....2.9.6 Clock Adjustment 55
....2.9.7 Dual Access Operation 56
....2.9.8 System Data Programming 57
....2.9.9 Dial Parameters Settings 58
.....Dial Parameters Settings (Table 2.9.9) 59
....2.9.10 Off-line Tests 60
....2.9.11 On-line Tests 61
2.10 Installation of Optional Units 62
....1. Memory Board 63
....2. CTR (PC interface) board 64
....3. Optional Telephone Set 65
....4. Second Paper Cassette Unit 66

3 Brief Technical Description

3.1 Fundamentals of the Electro-Photographic Process 67
....Electric Photographic Process Flow 68
3.2 Actual Electo-photographic Process (Figure 3.2.1) 69
3.3 Boards and Units 70
....Block Diagram (Figure 3.3.2) 71
3.4 Overall Dimension and Mechanical Structure 72

4 Disassembly

4.1 General 73
....4.1.1 Precautions for Parts Replacement 74
....4.2.2 Tools 75
4.2.3 How to Disassemble and Reassemble 76
.....Disassembly Procedure Flow (Figure 4.2) 1 of 2 77
.....Disassembly Procedure Flow (Figure 4.2) 2 of 2 78
....4.2.3.1 LED Print Head 79
....4.2.3.2 Image Drum, Covers (Rear, NCU, Main) Separation Plate, Boards (NCU, Modem) 80

Table of Contents	Page
....4.2.3.3 Control Panel Assembly, Paper Guide (U) Assembly	81
....4.2.3.4 Sub-roller, ADF Roller Assembly, Pinch Roller, Contact Image Sensor, Document Detectors (PC1 and PC2)	82
....4.2.3.5 Motors (Resist, Drum), Assemblies (Release Guide, Manual Guide) Stacker Cover, Fusing Unit	83
....4.2.3.6 Lower Base, Motor Assembly, Back-up Roller, Transfer Roller	84
....4.2.3.7 Resist Roller, Hopping Roller, Sensor Plate	85
....4.2.3.8 MCNT Board, Power Supply Unit, Contact Assembly, Transformer, Sub-PSU	86
5 Adjustments	
5.1 Setting of LED Print Head Drive Time	87
5.2 Confirmation Items	88
5.3 Measurement	89
....Measurement Points on M17 Board (Figure 5.3.1)	90
6 Cleaning and Maintenance	
6.1 Consumables Replacement	91
....Replaceable Items Diagram (Figure 6.1.2)	92
....Others - Reliability (Figure 6.1.1)	93
6.2 Preventative Maintenance	94
....Preventative Maintenance (Table 6.2.2)	95
....Preventative Maintenance Diagram (Figure 6.2.2)	96
6.3 Printer Counter Display/Clear (User)	97
....6.4 Printer Counter Display/Clear (Service)	98
6.5 Self-Diagnosis Test	99
....Self-Diagnosis Test Sample (Figure 6.5.1)	100
....Explanation of Self-Diagnosis Test Items	101
6.6 Sensor Calibration Test	102
6.7 LED Test	103
6.8 Tone Send Test	104
6.9 High-speed Modem Send Test	105
....High-speed Modem Send and Receive Test Diagram (Figure 6.9.1)	106
6.10 High-speed Modem Receive Test	107
6.11 MF Send Test	108
6.12 Tone (TEL/FAX)	109
6.13 Protocol Data Dump (Figure 6.13.1)	110
....Sample Protocol Data Dump (Figure 6.13.1)	111
....Data Analysis (Figure 6.13.2)	112
....Facsimile Control Field Conversion Table	113
7 Troubleshooting	
7.1 Overview	114
....7.1.1 Overall Troubleshooting Flow Chart	115
....7.1.2 No LCD Operation	116

Table of Contents	Page

....7.1.3 Alarm LED On 117
....7.1.4 Printing Test Failure 118
....7.1.5 No Local Copy 119
....7.1.6 Auto Dial Failure 120
....7.1.7 Transmission Problem 121
....7.1.8 Auto Reception Failure 122
....7.1.9 Reception Problem 123
....7.1.10 Sensor Calibration Test 124
....7.1.11 LED Test 125
....7.1.12 Tone Send Test 126
....7.1.13 High-speed Modem Test 127
....7.1.14 MF Send Test 128
....7.1.15 Tone (TEL/FAX) Send Test 129
....7.1.16 No Acoustic Line Monitor 130
....7.1.17 Power Supply Unit 131
....7.1.18 No Document Feeding 132
....7.1.19 Multiple Document Feeding 133
....7.1.20 Document Skew 134
....7.1.21 Document Jam 135
....7.1.22 Printer Unit 136
.....7.1.22.1 Precautions 137
.....7.1.22.2 Troubleshooting Flow Charts of Printer Unit 138
.....Overall Troubleshooting Flowchart 139
.....1: Top Cover is Open 140
.....2: Replace Image Drum Message 141
.....3: Engine Controller Error 142
.....4: Fan Motor Rotation Error 143
.....5: Fuser Unit Thermal Error 144
.....6: Paper Jams 145
.....7: No Paper Tray or No Paper 146
.....Action Items (Printer Unit-LCD Message) Table 7.1.22.2 147
.....7.1.22.3 Image Problems Table 148
.....Sample Image Problems (Figure 7.1.22.1) 149
.....8: Light or Blurred Output 150
.....9: Smeared Background on Output 151
.....10: Blank Output 152
.....11: Vertical Black Stripes on Output 153
.....12: Evenly Spaced Marks on Output 154
.....13: Missing Print on Output 155
.....14: Vertical White Stripes on Output 156
.....15: Poor Fusing 157

8 Dipswitch Settings

8.1 General Information 158

A Board Descriptions

Table of Contents	Page
A1.1 Unit Configuration and Block Diagram (Figure A.1.12)	159
....Block Diagram (Figure A1.2.2)	160
....Block Diagram Abbreviations	161
A1.2 Function of Each Unit	162
A2.1 Signal Flow Explanation	163
....(1) Copy Mode	164
....Copy Picture Signal (Figure A2.2.1)	165
....(2) G3 Send Mode	166
....G3 Send Pciture Signal (Figure A2.2.2)	167
....(3) G3 Receive Mode	168
....G3 Receive Picture Signal (Figure A2.2.3)	169
....(4) 300 bps Send Mode	170
....300 bps Send Signal (Figure A2.2.4)	171
....(5) 300 bps Receive Mode	172
....300 bps Receive Signal (Figure A2.2.5)	173
....(6) Report Printing	174
....Report Printing Signal (Figure A2.2.6)	175
....(7) Memory Transmission	176
....(8) Memory Reception	177
....Related Signals of CPU Diagram (Figure A3.2.1)	178
A3.2 M17 Circuit Diagram	179
....A3.2.1 M17 Circuit Diagram	180
.....Related Signals of CPU Diagram (Figure A3.2.1)	181
....A3.2.2 M17 Circuit Diagram	182
.....Related Signals of IOGA (Figure A3.2.2)	183
....A3.2.3 M17 Circuit Diagram	184
.....Block Diagram of FLS, MASK and Real Time Clock (Figure A3.2.3)	185
....A3.2.4 M17 Circuit Diagram	186
.....Block Diagram of Audio Monitor Circuit (Figure A3.2.4)	187
....A3.2.5 M17 Circuit Diagram	188
.....Related Signals and Block Diagram of CIS (Figure A3.2.5)	189
....A3.2.6 M17 Circuit Diagram	190
.....Related Signals of EXSEED (Figure A3.2.6)	191
....A3.2.7 M17 Circuit Diagram	192
.....Related Signals of Modem (Figure A3.2.8)	193
....A3.2.8 M17 Circuit Diagram	194
.....Interface between M17 Board and NCU Board (Figure A3.2.9)	195
.....Interface between M17 Board and OPE (Figure A3.2.10)	196
.....Related Signals of PC1/PC2 (Figure A3.2.11)	197
....A3.2.9 M17 Circuit Diagram	198
.....Related Signals and Block Diagaram of LED Head (Figure A3.2.12)	199

Table of Contents	Page
....A3.2.10 M17 Circuit Diagram	200
.....Related Signals of Send Motor (Figure A3.2.13)	201
....A3.2.11 M17 Circuit Diagram	202
.....Related Signals of Drum/Resist Motor (Figure A3.2.14)	203
....A3.2.12 M17 Circuit Diagram	204
.....Related Signals of Fan Motor (Figure A3.2.15)	205
.....Figure A3.2.16 Interface between M17 Board and 2'nd Tray	206
....A3.2.13 M17 Circuit Diagram	207
.....Sensor Functions	208
.....Sensors and Switch Control (Figure A3.2.17)	209
.....Fuser Unit Temperature Control (Figure A3.2.18)	210
.....High/Medium Voltage Control (Figure A3.2.19)	211
....A3.2.14 M17 Circuit Diagram	212
.....Interface: M17 Board to Optional Memory Board (Figure A3.2.20)	213
.....Interface M17 Board to CR Board (PC interface unit) (Figure A3.2.21)	214
....A3.2.15 M17 Circuit Diagram	215
.....Block Diagram of DRAM (Figure A3.2.22)	216
....A3.4 OPE (05W) Circuit Diagram	217
.....Block Diagram of OPE (operation unit) (Figure A3.4.1)	218
....A3.6 Power Supply Unit	219
....A3.6.1 1VP (for 120 V)/2VP (for 230 V) Circuit Diagram (1/2)	220
.....1. Low-voltage power supply circuit	221
.....2. Input ratings	222
.....3. Output ratings	223
.....4: Block Diagram	224
.....Block Diagram of PWU (power supply unit) (Figure A3.6.1)	225
.....5. General functional description	226
.....5-1 General	227
.....5-2 Circuit Description	228
.....5-2-1 AC input section	229
.....5-2-2 Heater control circuit	230
.....5-3 Low-voltage section	231
.....5-3-1 +30 V circuit	232
.....5-3-2 +/- 8 V circuit	233
.....5-3-3 +5 V circuit	234
.....5-4 Protection circuit	235
.....5-5 Cover open circuit	236
....A3.6.2 1VP (for 120V)/2VP (for 230V) Circuit Diagram (2/2)	237
.....5-6 High-voltage Section	238
.....5-6-1 Functional overview	239
.....5-6-2 SB2, DB1, DB2 and CB	240

Table of Contents	Page
.....5-6-3 TR1 and TR2	241
.....5-6-4 CH	242
.....5-7 Photosensors	243
A3.7 UNC5 (NCU) Circuit Diagram	244
....Block Diagram of UNC (Figure A3.7.1)	245
A3.8 TELU Circuit Diagram (option)	246
....Block Diagram of TEL-U (option) (Figure A3.8.1)	247
A3.11 MEMO (memory) Circuit Diagram	248
....Related Signals of Memory Board (option) (Figure A3.11.1)	249
A3.12 CTR Circuit Diagram (PC interface unit: option)	250
....Related Signals of P050 (PC interface unit) (Figure A3.12.1)	251
....Block Diagram of 2nd Tray (Figure A3.13.1)	252
A3.13 TQSB (Second tray) Circuit Diagram: option	253
B Print Operation Description	
Overview	254
B2.1 Mechanical Components	255
....1) Image drum cartridge	256
....2) Resist motor	257
....3) Drum motor	258
....4) LED head	259
....5) Fuser	260
....Layout of Print Station Components (FigureB2.1)	261
B2.2 Description of Print Operations	262
....B2.2.1 Process Operations	263
.....1) Hopping and feeding	264
.....2) Charging	265
.....3) Exposure	266
.....4) Developing	267
.....5) Transfer	268
.....6) Fusing	269
.....7) Cleaning	270
.....8) Cleaning of rollers	271
....B2.3 Errors	272
.....B2.3.1 Errors List	273
.....B2.3.2 Major Trouble Errors	274
.....B2.3.2.1 Fuser Error (Print Alarm 4)	275
.....B2.3.2.2 Fan Error (Print Alarm 3)	276
.....B2.3.2.3 Paper Feed Monitoring	277
.....B2.3.2.4 2'nd Tray Communication Error (Printer Alarm 2)	278
.....B2.3.2.5 Cover Open	279
.....B2.3.3 Recoverable Errors	280
.....B2.3.3.1 Toner Low Detection	281
.....Composition	282

Table of Contents	Page

.....Operation 283
.....Operation during toner full state 284
.....Operation during toner low state 285
.....Low Toner Alarm 286
.....B2.3.2.3 Paper Feed Monitoring 287
C Circuit Diagrams
C.1 General Information 288
D Illustrated Parts List
Assembly 289
1: Cabinet Assembly 290
2: Control Panel Assembly 291
3A: Printer Assembly (1 of 2) 292
3A: Printer Assembly (2 of 2) 293
4A: Base Assembly (1 of 2) 294
4A: Base Assembly (2 of 2) 295
5: Scan Unit 296
6: Paper Guide Assembly 297
7: Cables 298
8: Option Telephone 299
9A: Second Paper Feed (Option) 300
9B: Second Paper Feed (Option) 301
10: Miscellaneous 302
....Whole Unit 303
....Consumables 304
....Options 305
....Packaging 306
....User's Manuals 307
....Service (Technical) Manuals 308
E Board Layout
Diagram 309
F Second Paper Feeder
1. Outline 310
....1.1 Functions 311
....1.2 External View and Component Names (Figure 1-1) 312
2. Mechanism Description 313
....2.1 General Mechanism 314
....2.2 Hopper Mechanism 315
3. Parts Replacement 316
....3.1 Precautions Concerning Parts Replacement 317
....3.2 Parts Layout 318
....3.3 Parts Replacement Methods 319
.....3.3.1 Stepping Motor (Hopping) 320
.....3.3.2 TQSB2-PCB 321
.....3.3.3 Hopping Roller Shaft Assy and One-way Clutch Gear 322

Table of Contents	Page

4. Troubleshooting 323
....4.1 Precautions Prior to the Troubleshooting 324
....4.2 Preparations for the Troubleshooting 325
....4.3 Troubleshooting Method 326
.....4.3.1 LCD Status Message List 327
5. Connection Diagram 328
....5.1 Interconnection Diagram 329
....5.2 PCB Layout 330
6. Parts List 331

G RMCS System

Introduction 332
1. Notes to Users 333
....1.1 Identifying the Packaged Contents 334
....1.2 Required Devices 335
....1.3 Connectable Peripheral Equipment 336
2. Setup 337
....2.1 Mounting 338
.....2.1.1 Mounting Procedures 339
....2.2 Installation 340
.....2.2.1 Registering the RMCS Basic System 341
.....2.2.2 Registering the Facsimile Model No. 342
.....2.2.3 Deleting the Facsimile Model No. 343
.....2.2.4 Updating the Password 344
.....2.2.5 Updating the Dip Switches 345
.....2.2.6 Deleting the RMCS Basic System 346
3. RMCS Basic Operation 347
....3.1 Activating and Terminating the system 348
.....3.1.1 To Activate 349
.....3.1.2 Entering the ID and Password 350
....3.2 TEL Directory 351
.....3.2.1 To Terminate 352
.....3.2.2 Selecting Destination Drive 353
....3.3 Main Menu 354
....3.4 Environment Setting 355
4. Message Modifying Tool 356
....4.1 Activating the Program 357
....4.2 Modifying Message 358
.....4.2.1 File Selection 359
....4.3 Saving Message 360
.....4.3.1 Confirmation 361
....4.4 Loading Message 362
.....4.4.1 Confirmation 363
....4.5 Other Message File 364

H Product Service Bulletins

Table of Contents	Page
H.1 General Information	365
....OKIDATA'S Web Site	366
....Faxable Facts	367
....OKILINK II	368
I Recommended Spare Parts List (RSPL)	
I. General Information	369
....OKIDATA'S Web Site	370
....Faxable Facts	371
....OKILINK II	372

Service Manual for OF5300/5600

Chapter 0 Introduction

Kit Contents

This Read Me First Sheet	Quick Start Guide
Certification Manual	Hardware Handbook
Service Manual	PC Interface Kit

Missing Items

If any items are missing, please contact OKIDATA Order Processing at the appropriate number listed below.

United States / Latin America
Facsimile: 609-222-5022
Voice: 800-727-8654

Canada
Facsimile: 905-238-4421
Voice: 905-238-4250

You must provide the information listed below.

- OKIDATA Authorization Number (Dealer Number)
- OKIDATA Customer Number
- Order Acknowledgment Number (on the invoice)
- Part Number of Kit

Completing the Course

Refer to the Certification Manual for information on completing the course.

Copyright 1997, Okidata, Division of OKI America, Inc. All rights reserved. See the OKIDATA Business Partner Exchange (BPX) for any updates to this material. (http://bpx.okidata.com)

Disclaimer

This document may not be reproduced without the written permission of OKIDATA Training and Publications. Every effort has been made to ensure the accuracy of the information contained in this training course. OKIDATA is not responsible for errors beyond its control.

Copyright / About Information

Copyright 1997 by OKIDATA All rights reserved.

First Release P/N 59278301 September, 1997

Written by OKIDATA Training and Publications

Contact

Please address any comments on this publication to:

Mailing Address
OKIDATA
Training and Publications
532 Fellowship Road
Mount Laurel, NJ 08054-3499

Web Site - **www.OKIDATA.com**

Telephone - (609) 235-2600

Facsimile - (609) 222-5320

Okilink Login Name - Technical Training

Copyright Listing

OKIDATA is a registered trademark of Oki Electric Industry Company, Ltd.; marques deposee de Oki Electric Industry Company, Ltd.; marca registrada, Oki Electric Industry Company, Ltd.

Faxable Facts is a trademark, All Rights Reserved, 1993

IBM, PC, PC-DOS, and Proprinter XL are registered trademarks of International Business Machines Corporation.

Microsoft and MS-DOS are registered trademarks and Microsoft Basic, Windows, TrueImage, and TrueType are trademarks of Microsoft Corporation.

Okilink II is a trademark of Oki Electric Industry Company, Ltd.

ZIP Code is a registered trademark of the United States Postal Service.

Copyright 1997, Okidata, Division of OKI America, Inc. All rights reserved. See the OKIDATA Business Partner Exchange (BPX) for any updates to this material. (http://bpx.okidata.com)

May, 1998

RE: OKIFAX 5050 Service Authorization

Dear Okidata Facsimile Dealer:

Okidata is proud to announce the addition of the OKIFAX 5050 to our facsimile product line.

Enclosed is the OKIFAX 5050 Service Information Addendum, which will assist you in your efforts to support this product. This addendum is to be used with the OKIFAX 5300/5600 Service Manual.

There is no need to complete a Certification Test for the OKIFAX 5050. All OKIFAX 5300/5600 Authorized Service Providers will automatically be authorized to perform warranty repairs on the OKIFAX 5050.

If you haven't already, please visit Okidata's Web Site at www.okidata.com. The Business Partner Exchange (BPX) is your best link for current service and support information. Documentation (both user and service) is available on-line.

Recommended Spare Parts Lists, Product Specifications, and Product Service Bulletins are just a few of the many things available through the BPX. Check it out!

Sincerely,

Patrick J. Giacobbe
Manager, Training and Publications

Copyright 1997, Okidata, Division of OKI America, Inc. All rights reserved. See the OKIDATA Business Partner Exchange (BPX) for any updates to this material. (http://bpx.okidata.com)

OKIDATA

Service Manual for OF5300/5600

Chapter 0 Introduction

Functionality

The OKIFAX 5050 is technically similar to the OKIFAX 5300. The physical appearance is identical to the OKIFAX 5300; however, the OKIFAX 5050 is strictly a stand-alone facsimile product. Although there is a PC Interface connection socket on the OKIFAX 5050's Main Control Board, this socket is not functional, and the PC Interface cannot be used on this product. This socket will only be used to update Flash ROM using the High Speed Loading System.

In addition, the OKIFAX 5050 will only accept the 1.5 MB Memory Option (with battery back-up), and the 1 MB Memory Option (without battery back-up). Other than the lack of PC Interface and optional memory capability, there are no other functional or operational differences between the OKIFAX 5050 and the OKIFAX 5300.

Hardware

There are two hardware (spare part) differences between the OKIFAX 5050 and OKIFAX 5300. The following parts are unique to the OKIFAX 5050:

1. Main Control PCB (E17-3 PCB)	P/N 55083101
2. Operator Panel Assembly (Contains the OKIFAX 5050 logo)	P/N 55083210

Firmware

For First Production Release Firmware Information, refer to Product Bulletin # E708 (on the back of this sheet).

Standard Memory

The OKIFAX 5050 has 256kb of standard document storage memory.

Documentation

OF5050 User Guide	P/N 59286401
OF5050 Quick Start Guide	P/N 59286501

Options

1.5 MB Expansion Memory with Battery Back-up	P/N 70031501
1.0 MB Expansion Memory without Battery Back-up	P/N 70029101
500 Sheet Letter/Legal Paper Tray	P/N 70029401
Telephone Handset	P/N 70031801

Consumables

Drum and toner	same as the OKIFAX 5300/5600
Toner Cartridge	P/N 52106701
Image Drum Kit	P/N 56116901

Service Procedures

When servicing the OKIFAX 5050, refer to the maintenance procedures for the OKIFAX 5300 in the OKIFAX 5300/5600 Service Manual. The OKIFAX 5300 procedures apply to the OKIFAX 5050.

Service Authorization

All OKIFAX 5300/5600 Authorized Service Providers will automatically be authorized to perform warranty repairs on the OKIFAX 5050.

PACKAGING

Box, w/ graphics	P/N 53593002
Foam Endcap: Left	P/N 53591101
Foam Endcap: Right	P/N 53591102

Level:	First Production Release:	**Version:**	FC11
Firmware:	Flash ROM 1	**Location:**	E17-3 PCB
Serial Number Effectivity:	**OF 5050: All Serial Numbers**	**Size:**	4 MB
Okidata P/N:	N/A (not socketed firmware)	**Oki-J PN:**	N/A (not socketed firmware)
Self Test Rev:	B39B		

Level:	First Production Release:	**Version:**	GC11
Firmware:	Flash ROM 2	**Location:**	E17-3 PCB
Serial Number Effectivity:	**OF 5050: All Serial Numbers**	**Size:**	4 MB
Okidata P/N:	N/A (not socketed firmware)	**Oki-J PN:**	N/A (not socketed firmware)
Self Test Rev:	A0C9		

Application

This Flash firmware version is incorporated in first production release of the OKIFAX 5050.

Changes:

None (First Production Release)

Note: The OKIFAX 5050 uses Flash ROM to store firmware and configuration changes. These ROMS are not socketed, and cannot be physically replaced. The Flash ROM version is field upgradable using two methods:

1. Replace the OKIFAX 5050 Main Control PCB (E17-3 PCB, part number 55083101). Replacement boards should always contain the current version firmware.

2. Use the Remote Management Center System (RMCS) to upgrade Flash ROM remotely via the telephone. The "RMCS" is a remote diagnostic system, that may be purchased by authorized OKIDATA dealers that allows remote programming and diagnosis of OKIFAX machines via telephone. The OKIFAX 5050's Flash Firmware can also be updated remotely using this tool. For more information regarding the availability and/or purchase of an OKIFAX RMCS system, please contact your OKIDATA Sales Representative.

Copyright 1997, Okidata, Division of OKI America, Inc. All rights reserved. See the OKIDATA Business Partner Exchange (BPX) for any updates to this material. (http://bpx.okidata.com)

(01) Type of appearance

- Desktop type

(02) Applicable lines

- Public switched telephone network (PSTN)
- Private branch exchange (PBX)

(03) Compatibility

- ITU-T Group 3 facsimile transceiver

(04) Document width

- Max. 216 mm (8.5 inches [North American Letter])
- Min. 148 mm (5.83 inches [ISO A5 size])

(05) Effective reading width

- Max. 215 mm (8.46 inches)

(06) Scanning length

- 128 mm to 356 mm (5.06 inches to 14 inches)

(Length setting: Infinite is also available.)

(07) Automatic document feeder (ADF)

- 30 sheets (Letter/A4-size: 20-1b bond.)
- 15 sheets (Letter/A4-size: 13 to 28-1b bond

(08) Recording paper or sheet

• First cassette:	NA Letter/NA Legal/A4-size plain paper cut 250 sheets capacity (20-1b bond*)
• Second cassette (Option):	NA Letter/NA Legal/A4-size plain paper cut 500 sheets capacity (20-1b bond*)
• Manual loading feeder: (Single Sheet Feeder)	• Manual loading feeder: Transparency for overhead projector, applicable. Sheet size: NA Letter/NA Legal/A4-size

*: Oki Data recommended paper

(09) Printable width

• North American Letter:	211.3 mm (8.32 inches) / 203.2 mm (8 inches) for assured quality
• North American Legal:	211.3 mm (8.32 inches) / 203.2 mm (8 inches) for assured quality
• ISO A4:	206 mm (8.11 inches) / 197.3 mm (7.77 inches) for assured quality

(10) Printable length

	● Letter: ● Legal: ● ISO A4:	273.4 mm (10.76 inches) / 266.7 mm (10.49 inches) for assured quality 349.6 mm (13.76 inches) / 342.9 mm (13.49 inches) for assured quality 291 mm (11.46 inches) / 284.3 mm (11.19 inches) for assured quality

Copy stacker

(11)

- Max. 100 sheets (20-lb bond, Oki Data recommended paper)

(12) Scanning resolution

a) Horizontal

- 300 dots/inch

b) Vertical

Transmission mode:	3.85 line/mm (STD) 7.7 line/mm (FINE) 300 dot/inch (EX.FINE)
COPY mode:	7.7 line/ mm (FINE 300 dot/inch (EX.FINE

(13) Scanning method

- 2592 bits contact image sensor

(14) Recording resolution

a) Horizontal:
300 dots/inch
b) Vertical

Variable:	Automatically adjusted to the paper length. (300 to 395 dot/inch), STD mode (3.85 to 5.06 line/mm) FINE mode (7.7 to 10.13 line/mm) EX-FINE mode (15.4 to 20.24 line/mm)
Fixed:	STD mode: 3.85 line/mm FINE mode: 7.7 line/mm EX-FINE mode : 15.4 line/mm : 300 dot/inch

(15) Recording method

- 211.3 mm (8.32 inches / 2496 bit) or 216.7 mm (8.53 inches / 2560 bit) LED Head

(16) Minimum scan line time for reception

● When receiving from OKIFAX or ECM:	0 ms
● When receiving from non-OKIFAX and non ECM:	10 ms at 3.85 line/mm 5 ms at 7.7 line/mm

(17) Print speed

- Max. 8 sheets per minute

(18) Preheating time

- Approx. 20 sec. (Standby to Print)

(19) Coding scheme

- Modified Huffman (MH)
- Modified READ (MR)
- Modified Modified READ (MMR)

(20) (20) Modem

- ITU-T Rec. V.29: 9600/7200 bps
- ITU-T Rec. V.27 ter: 4800/2400 bps
- ITU-T Rec. V.21 channel 2: 300 bps
- ITU-T Rec. V.17: 14400/12000 bps
- ITU-T Rec. V.33: 14400/12000 bps
- ITU-T Rec. V.34: 28800 bps (OKIFAX 5600 only)

Note: 33600 bps (V.34) is available (OKIFAX 5600) when Tech Func 32 is set to 3429.

(21) Transmission speed

- 6 sec. per sheet of ITU-T No. 1 sample document (OKIFAX 5300)
- 3 sec. per sheet of ITU-T No. 1 sample document (OKIFAX 5600)

Note: This is Phase C time at 3.85 line/mm and 28800 bps for 3 sec. and 14400 bps for 6 sec. in MMR code transmission.

(22) Protocol

- ITU-T Rec. T.30
- OKI special protocols: High-speed protocol

(23) Error correction mode (ECM)

(24) Communication mode

- Half duplex

(25) Memory capacity

- Basic model: 256k byte (OKIFAX 5300)
  512k byte (OKIFAX 5600)
- Optional memory: 1M byte memory board can be added. (OKIFAX 5300)
  One of either 1M byte or 2M byte memory board can be added. (OKIFAX 5600)

(26) Liquid crystal display (LCD)

- Two rows of 20 characters for operation guidance, check and various kinds of information

(27) Power source

- Nominal input voltage 120 VAC for ODA version
- Nominal input voltage 230 VAC for INT'L version

(28) MFP (Multi- Function Peripheral) function (Option)

- The CTR board provides the MFP function
  PC Printer Function
  PC Scanner Function
  PC Fax Modem Function
  Location Programming Function

Copyright 1997, Okidata, Division of OKI America, Inc. All rights reserved. See the OKIDATA Business Partner Exchange (BPX) for any updates to this material. (http://bpx.okidata.com)

(01) Transmit mode
- Automatic transmit mode
- Manual transmit mode

(02) Receive mode
- Automatic receive mode
- Manual receive mode
- TEL/FAX automatic switchover mode
- TAD mode
- PC mode

(03) Dual access

(04) Voice request

(05) Automatic redial

(06) Last number redial (Manual redial)

(07) Local copy including multiple copies
- Max. 99 copies of document

(08) Sender identification (Sender ID)

(09) Personal identification (Personal ID)

(10) Polling transmission

(11) Polling reception

(12) Acoustic line monitor

(13) Telephone handset (option)

(14) Automatic alternate selecting call
(FAX No. + FAX No. can be registered in one-touch keys).

(15) Delayed transmission
Maximum length of delay: 3 days
- Delayed broadcast
- Delayed transmission

OKIFAX 5300: 5 specified times
OKIFAX 5600: 20 specified times

(16) Relay broadcast initiate

(17) Confidential message transmission (Hopper 1 station)

(18) Confidential message reception
- OKIFAX 5300: 8 mail boxes
- OKIFAX 5600: 16 mail boxes

(19) PHOTO mode
- 64 scale gradations (Error Diffusion Method)

(20) G3 sequential broadcast (Memory)
- Broadcast mode

OKIFAX 5300: 84 stations at maximum
OKIFAX 5600: 134 stations at maximum
- Delayed broadcast mode

(21) No paper/no toner reception

(22) Memory-only reception
Memory reception even if paper does not run out

(23) Distinguishing Text from picture

(24) Page retransmission
Only in memory TX mode
Retransmits in page units

(25) Reduction printing
Reduction rate is from 100% to 75% (Legal to Letter)

(26) Smoothing printing
In case of 3.85 L/mm to 7.7 L/mm

(27) Programmed key operation
"F" key + "OT" key

(28) Auto dialing

- One-touch dialing OKIFAX 5300: 15 locations (Maximum of 32 digits each)
- OKIFAX 5600: 30 locations (Maximum of 32 digits each)
  Two-digit automatic dialing OKIFAX 5300: 64 locations (Maximum of 32 digits each)
  OKIFAX 5600: 99 locations (Maximum of 32 digits each)
- Keypad dialing
- Chain dialing
- Mixed dialing
- Group dialing OKIFAX 5300: 10 dialing groups (Maximum of 79 locations each)
  OKIFAX 5600: 20 dialing groups (Maximum of 129 locations each)

(29) Real-time dialing
In case of optional handset is installed or Hook key

(30) Automatic pause signal insertion

(31) Manual feeder local copy

(32) Telephone directory (Alpha search) dialing

(33) TEL/FAX automatic switching

(34) Time and date printing

(35) Closed users group (Direct mail rejection)

(36) Transmission contrast and resolution control

(37) Key touch tone

(38) Printer counter display (For drum, toner, total print)

(39) Total page counter (Scan)

(40) Quick scanning
6 second minimum for A4 size 3.85 Lines per mm for OKIFAX 5300
3 second minimum for A4 size 3.85 Lines per mm for OKIFAX 5600

(41) Date and clock adjustment

(42) PC interface

- Standard

(43) Language selection

- Available
  English / Spanish
  English / French

(44) Fax forwarding
OKIFAX 5600 only

(45) Reports

- Activity report
- Protocol report (Service man setting)
- Message confirmation report (Single address or multiple addresses)
- Broad cast entry report (Broadcast)
- Transmission error report
- Confidential reception report
- Configuration report
- Telephone directory
- Power outage report

Copyright 1997, Okidata, Division of OKI America, Inc. All rights reserved. See the OKIDATA Business Partner Exchange (BPX) for any updates to this material. (http://bpx.okidata.com)

(01) Self-diagnosis
- CPU ROM/RAM check
- FLASH (/MASK) memory check (Program, Language, Default)
- RAM check
- RAM check (MEMORY board: option)
- PC-IF board (parallel) check
- Print test

(02) Sensor calibration (Adjustment of scanning level)
(03) LED test
(04) Tone send test
(05) Multi-frequency (MF) send test
(06) High-speed modem send test
(07) High-speed modem receive test
(08) Tone (TEL/FAX) test
(09) Remote diagnosis
(10) System reset
(11) Service default report (Machine setting for service engineer)

Copyright 1997, Okidata, Division of OKI America, Inc. All rights reserved. See the OKIDATA Business Partner Exchange (BPX) for any updates to this material. (http://bpx.okidata.com)

Figure 1.4.2 shows the general appearance of the OKIFAX 5300/5600

General Appearance of OKIFAX 5300/5600 (Figure 1.4.2)

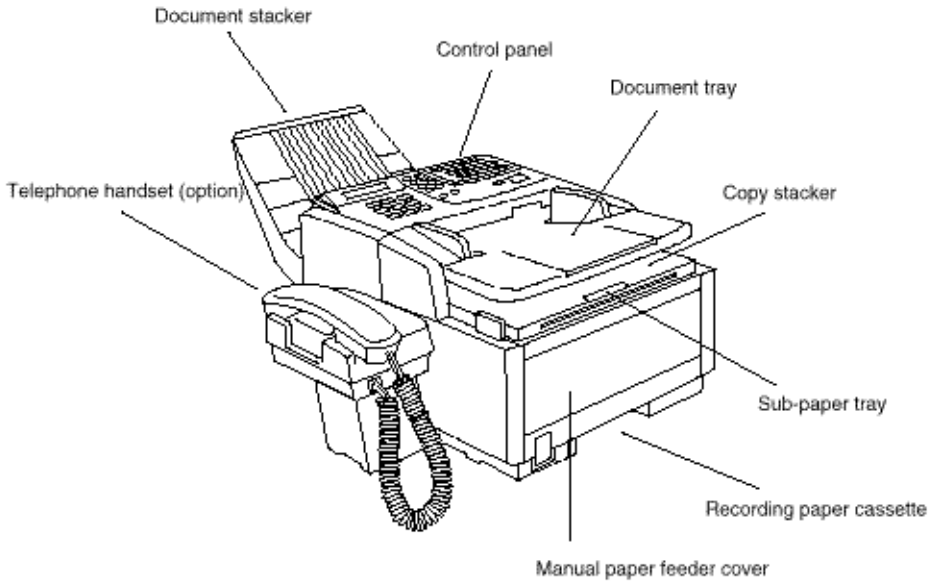

Copyright 1997, Okidata, Division of OKI America, Inc. All rights reserved. See the OKIDATA Business Partner Exchange (BPX) for any updates to this material. (http://bpx.okidata.com)

Table 1.5.1 shows basic performance specifications.

Note:
TF: Technical function setting
FP: Function program setting
OT: One-touch key pressed
F: SELECT FUNCTION key pressed

No.	Item	Specifications
01	**Applicable line**	1) Public switched telephone network (PSTN) 2) Private branch exchange (PBX) (OT9+2)
02	**Line interface**	
	1) Impedance	600Ω balanced
	2) Sending power level	0 dBm to –15 dBm range (Adjustable in 1 dB steps. TF + 22)
	3) Receiving power level	0 dBm to –40 dBm range
03	**Type of document to be transmitted**	
	1) Width	Max. 216 mm [8.5 inches] (Letter) Min. 148 mm [5.83 inches] (ISO A5 size) ***Note:*** Effective reading width is Letter (215 mm [8.46 inches]).
	2) Length	Min. 128 mm (5.04 inches) Max. 356 mm (14 inches) Long document detection: 356 mm (14 inches), or 60 minutes * TF + 11 (To enable or disable the long document scanning) An operator can turn the long document scanning feature on or off for each call in the operating sequence.
	3) Thickness	Based on common bond paper, a) Multiple page feeding 0.08 to 0.13 mm (.003 to .005 inches) b) Single page feeding 0.06 to 0.15 mm (.002 to .006 inches
	4) Shape	Rectangular
	5) Opacity	Documents allowing less than 40% of the scanner source light to pass through them.

No.	Item	Specifications
04	**Effective reading width**	

Document width	Communication Mode/Paper width	Effective reading width	Copy size
ISO A4 210 mm (8.23 inches) [INT'L/FTZ]	G3/A4	208 mm for TX (8.19 inches) 202.8 mm for local copy (7.98 inches)	A4
Letter 216 mm (8.5 inches) [US/CANADA]	G3/A4	215.1 mm for TX (8.47 inches) 211.2 mm for local copy (8.31 inches)	Letter
Legal 216 mm (8.5 inches)) [US/CANADA]	G3/A4	215.1 mm for TX (8.49 inches) 211.2 mm for local copy (8.31 inches)	Legal

Note Local copy: Printable reading width in local copy mode

05	**Automatic document feeder (ADF)**	Up to 297 mm (11.69 inches) in length. Max. 30 documents Letter or A4 (20-1b) Max. 15 documents: Letter or A4 (13-28lb bond paper) Documents shall be placed facedown on ADF stacker. The first sheet will be fed first in the feeder and will exit facedown in the document stacker.
06	**Document skew**	Max. 2.6 mm (.10 inches) skew over a document of A4 length. For a document longer than A4 length, occurrence of skew exceeding 2.6 mm (.10 inches) over any A4 length is 0.5% or less.

No.	Item	Specifications
07	**Document jam detection**	1) Transmission will stop and line disconnection will occur when the end of a document is not detected within 356 mm (14.02 inches) after scanning begins (except for the long document scanning. TF + 11) 2) A jam will also be declared if the document does not reach the scanning position within 5.5 seconds after the start of a document feed. ***Note:*** When a jam is detected during message transmission from the feeder, the machine will stop scanning and disconnect the line, but its receiving capability will remain valid.
08	**Document jam removal**	Manual release

No.	Item	Specifications
09	**Recording paper or sheet**	**NOTE:** **For best results use Oki Data recommended papers** **1) Xerox 4200 (20 - lb/base weight paper)** **2) Xerographic (Laser) paper for photo-printers**
	First or Second Recording Paper Cassette	1) Type: Plain paper cut (Bond paper) 2) Size: ISO A4 (210 mm x 297 mm) (8.27 x 11.69 inches) Letter (215.9 mm x 279.4 mm) (8.5 inch x 11 inch) Legal (215.9 mm x 355.6 mm) (8.5 inch x 14 inch) 3) Weight: 16 lbs to 24 lbs/base weight Base weight is defined as the weight of 500 sheets of 431.8 mm (17 inch) by 558.8 mm (22 inch). 4) Thickness: 0.08 mm to 0.12 mm .003 to .005 inches 5) Condition: New paper
	Manual Feeding	1) Type: Plain paper, transparency for overhead projector, colored paper, printed paper 2) Size: A4/Letter/Legal 3) Weight, thickness and condition: Same as above ***Note:*** ONLY one single sheet should be loaded on the manual loading feeder at any one occasion.

No.	Item	Specifications
07	**Document jam detection**	1) Transmission will stop and line disconnection will occur when the end of a document is not detected within 356 mm (14.02 inches) after scanning begins (except for the long document scanning. TF + 11) 2) A jam will also be declared if the document does not reach the scanning position within 5.5 seconds after the start of a document feed. ***Note:*** When a jam is detected during message transmission from the feeder, the machine will stop scanning and disconnect the line, but its receiving capability will remain valid.
08	**Document jam removal**	Manual release

No.	Item	Specifications
09	**Recording paper or sheet**	**NOTE:** **For best results use Oki Data recommended papers** **1) Xerox 4200 (20 - lb/base weight paper)** **2) Xerographic (Laser) paper for photo-printers**
	First or Second Recording Paper Cassette	1) Type: Plain paper cut (Bond paper) 2) Size: ISO A4 (210 mm x 297 mm) (8.27 x 11.69 inches) Letter (215.9 mm x 279.4 mm) (8.5 inch x 11 inch) Legal (215.9 mm x 355.6 mm) (8.5 inch x 14 inch) 3) Weight: 16 lbs to 24 lbs/base weight Base weight is defined as the weight of 500 sheets of 431.8 mm (17 inch) by 558.8 mm (22 inch). 4) Thickness: 0.08 mm to 0.12 mm .003 to .005 inches 5) Condition: New paper
	Manual Feeding	1) Type: Plain paper, transparency for overhead projector, colored paper, printed paper 2) Size: A4/Letter/Legal 3) Weight, thickness and condition: Same as above ***Note:*** ONLY one single sheet should be loaded on the manual loading feeder at any one occasion.

No.	Item	Specifications
10	**Recording paper cassette**	
	1) First cassette	250 sheets/cassette (20 lb. paper)
	2) Second cassette (Option)	500 sheets/cassette (20 lb. paper)

No.	Item	Specifications
11	**Effective recording area** ***Note:*** These tables do not include vertical and horizontal addressing deviations [+ or −2 mm (.08 inches)] of recording paper.	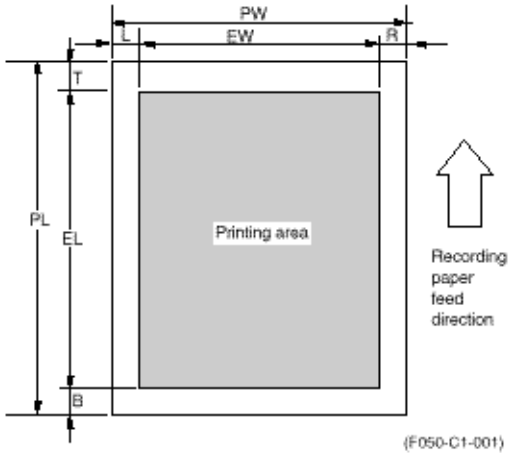

1) Printable area

(F050-C1-001)

	NA LETTER SIZE		ISO A4 SIZE		14 inch LEGAL SIZE		13 inch LEGAL SIZE	
	inch	mm	inch	mm	inch	mm	inch	mm
PL	11	279.4	11.7	297	14	355.6	13	330.2
PW	8.5	216	8.27	210	8.5	216	8.5	216
EL	10.76	273.4	11.46	291	13.76	349.6	12.76	324.2
EW	8.32	211.3	8.11	206	8.32	211.3	8.32	211.3
T	0.12	3	0.12	3	0.12	3	0.12	3
B	0.12	3	0.12	3	0.12	3	0.12	3
L	0.09	2.3	0.09	2	0.09	2.3	0.09	2.3
R	0.09	2.3	0.08	2	0.09	2.3	0.09	2.3

2) Guaranteed printing area

	LETTER SIZE		ISO A4 SIZE		14 inch LEGAL SIZE		13 inch LEGAL SIZE	
	inch	mm	inch	mm	inch	mm	inch	mm
PL	11	279.4	11.7	297	14	355.6	13	330.2
PW	8.5	216	8.27	210	8.5	216	8.5	216
EL	10.5	266.7	11.2	284.3	13.5	342.9	12.5	317.5
EW	8.0	203.2	7.77	197.3	8.0	203.2	8	203.2
T	0.25	6.35	0.25	6.35	0.25	6.35	0.25	6.35
B	0.25	6.35	0.25	6.35	0.25	6.35	0.25	6.35
L	0.25	6.35	0.25	6.35	0.25	6.35	0.25	6.35
R	0.25	6.35	0.25	6.35	0.25	6.35	0.25	6.35

No.	Item	Specifications
12	**Copy stacking**	The fax can discharge printed copies and stack them facedown. Maximum sheets on the copy stacker: 100* ***Note**:* 20 lb. paper
13	**Scanning resolution**	Horizontal: 300 dot/inch Vertical: Transmission mode: • 3.85 line/mm (STD) 7.7 line/mm (FINE) 300 dot/inch (EX. FINE) COPY mode: 7.7 line/ mm(FINE) 300 dot/inch (EX. FINE)
14	**Image scanning method**	Letter size (2592-bit) contact image sensor
15	**Contrast control**	1) Automatic background sensing A continuous document background of 0.3 OD (optical density) or less will be transmitted as white. 2) The LIGHT and DARK contrasts will automatically be adjusted to improve image quality.
16	**Recording resolution**	Horizontal: • 300 dot/inch Vertical: • 3.85 line/mm (STD) 7.7 line/mm (FINE) 300 dot/inch (EX-FINE)
17	**Recording system**	Electrophotographic printing 1) 211.3 mm [8.32 inches] (2496 bit) or 216.7 mm [8.53 inches] (2560 bit) LED print head
18	**Skew of recording paper**	Maximum allowable skew is + or - 1 mm (0.394 inches) over an advance of 100 mm (3.937 inches).

No.	Item	Specifications
19	**Copy darkness**	1) Black image: Greater than 1.0 OD (Optical density) 2) White background: Not greater than 0.2 OD (Optical density)
20	**Copy uniformity**	Printed copies will exhibit a uniform density of the printed and background area: 1) From edge to edge: 25% unit 2) From copy to the next copy: 30% unit
21	**Recording paper runs out**	The fax can detect the no-paper condition by a photosensor. When the paper has run out in the local copy operation, the scanning will stop with "NO PAPER ... REPLACE PAPER" on the LCD, and an ALARM LED turns on without an alarm tone. When the paper has run out while a message is being received and the no-paper reception is activated, the LCD display will show "MSG. IN MEMORY", and the ALARM LED turns on.
22	**Minimum scan line time for receiving**	0 ms, when receiving from an Oki Data facsimile. 5 ms at 7.7 line/mm and 10 ms at 3.85 line/mm when receiving from a non-Oki Data facsimile.
23	**Coding scheme**	1) One-dimensional coding scheme: Modified Huffman (MH) 2) Two-dimensional coding scheme: Modified READ (MR) Modified modified READ (MMR)
24	**MODEM**	
	1) High-speed MODEM	a) ITU-T Rec. V.29 (9600/7200 bps) b) ITU-T Rec. V.27 ter (4800/2400 bps) c) ITU-T Rec. V.17 (14400/12000/9600/7200 bps) d) ITU-T Rec. V.33 (14400/12000 bps) e) ITU-T Rec. V.34 (28800 bps); for OKIFAX 5500/5600
	2) Low-speed MODEM	ITU-T Rec. V.21 channel 2 (300 bps)

No.	Item	Specifications
25	**Fallback**	Automatic fallback will occur according to the following sequence by FTT, RTN or PPR.

Fallback rank	Transmission speed	Activated by FTT (Times)	Activated by RTN (Times)	Activated by PPR (Times)	Protocol
1st	14400 bps	1	1	4 (Note 1)	ITU-T V.17 (V.33)
2nd	12000 bps	1	1	4 (Note 1)	ITU-T V.17 (V.33)
3rd	9600 bps	1	1	4 (Note 1)	ITU-T V.17 (V.29)
4th	7200 bps	1	1	4 (Note 1)	ITU-T V.17 (V.29)
5th	4800 bps	2	1	4 (Note 1)	ITU-T V.27 ter.
6th	2400 bps	2	1	4 (Note 1)	ITU-T V.27 ter.

When the last trial fails, the transmitting station sends out a DCN signal to the remote station for disconnection.

Note 1: Continuous PPRs for the same partial page within each fallback rank.

Fallback rank	Transmission speed	Activated by PPR (Times)	Protocol
1st	28800 bps	1 (Note 1)	ITU-T V.34
2nd	26400 bps	1 (Note 1)	ITU-T V.34
3rd	24000 bps	1 (Note 1)	ITU-T V.34
4th	21600 bps	1 (Note 1)	ITU-T V.34
5th	19200 bps	1 (Note 1)	ITU-T V.34
6th	16800 bps	1 (Note 1)	ITU-T V.34
7th	14400 bps	1 (Note 1)	ITU-T V.34
8th	12000 bps	1 (Note 1)	ITU-T V.34
9th	9600 bps	1 (Note 1)	ITU-T V.34
10th	7200 bps	1 (Note 1)	ITU-T V.34
11th	4800 bps	1 (Note 1)	ITU-T V.34
12th	2400 bps	1 (Note 1)	ITU-T V.34

Note 2: V.34 modem performs the fall-back depending upon the line condition automatically protocol

No.	Item	Specifications
26	**Protocol**	1) ITU-T Rec. T.30 2) Oki Data special protocol High-speed protocol The T.30 protocol signal from the transmitting station is sent at message transmission speed instead of 300 bps. ***Note:*** In high-speed protocol, 28.8 K-bps are not supported.
27	**Transmission time**	OKIFAX 5300 6 sec. (approx 6.9 sec) /ITU-T No. 1 sample document OKIFAX 5600 3 sec. (approx 3.5 sec) /ITU-T No. 1 sample document ***Note:*** This is Phase C time at 3.85 line/mm and 28800 bps for 3 seconds and 14400 bps for 6 seconds in MMR code transmission.
28	**Error correction**	ITU-T Error correction mode (ECM) Oki Data ITU-T ECM
29	**Communication mode**	Half-duplex
30	**Ringing signal detection sensitivity**	
	1) Voltage range	25 to 150 V r.m.s. Inoperative below 10 V
	2) Frequency range	20 to 68 Hz
	3) Ring response time	One-ringing signal or 5 to 30 seconds. (Selectable in 5 sec. steps. F + OT9 + ← + 11)

No.	Item	Specifications
31	**Image memory**	

	Basic model	Optional memory
OKIFAX 5300	256K-byte	1M-byte
OKIFAX 5600	512K-byte	1M-byte/2M-byte

	Memory condition		OKIFAX 5300 [pages]	OKIFAX 5600 A4 Setting [pages]
With option board	Standard (without option)		17	35
	1M-byte		100	120
	2M-byte			200

Note: ITU-T No.1 sample document is used to count the number of sheets.

Back-up time on electrical interruption:
Minimum one hour (with option memory)

Note: Unless the optional memory is installed, the unit does not back up the message received in memory during a power failure.

32	**Telephone handset (option)**	General telephone function is available while the power is on.

Note: In the fax special versions, general telephone is available even when the power is off.

34	**Overheat protection**	The heater of the fuser unit is controlled within the predetermined temperature range by the thermistor. If the temperature of the heater exceeds the range, the LCD displays "PRINTER ALARM 4".

Furthermore, the built-in thermostat in the fuser unit prevents the heater from being overheated even in the event of the failures in the above temperature control circuit.

No.	Item	Specifications
35	**PC Interface Applications (Option)**	The following four modes are supported: 1) PC local printer function 2) PC scanner function 3) PC Fax Modem function 4) Location Programing function For, details, see product specification for MFP.
36	**Power supply unit and power consumption of the machine**	

Power consumption of the machine
(Typical power)

				OKIFAX 5300/5600
Transmit				60W
Receive				160W
Local copy				210W
Standby				16.6W

** The Power Save Mode is automatic for the OKIFAX 5600.
It cannot be enabled or disabled by the user.

No.	Item	Specifications
37	**Ambient condition**	
	1) Operating condition	See Figure 1.5.1
	2) Storage condition	See Figure 1.5.1

Ambient Conditions (Figure 1.5.1)

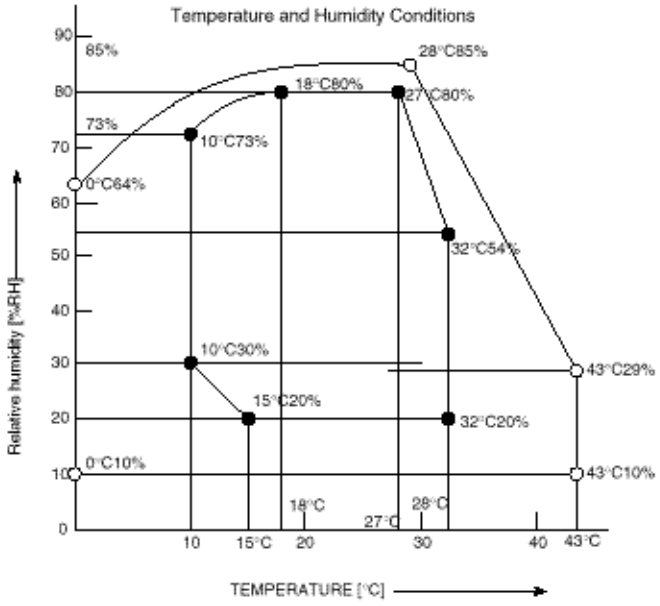

Area enclosed by lines with ● : Range where printing is guaranteed.
Area enclosed by lines with ○ : Range for storage without power supply.

(Note) The curve connecting 28°C, 85% and 0°C, 64% is the condensation curve.

No.	Item	Specifications
38	**Dimensions** (Main body)	1) Width: Approx. 330 mm (12.99 inches) 2) Depth: Approx. 420 mm (16.54 inches) 3) Height: Approx. 245 mm (9.65 inches)
39	**Weight** (Main body)	Approx. 13 kg (5.9 pounds) Excluding optional units, recording paper and packing materials.
40	**Attachments** (included with a new product)	1) AC power cord x 1 2) I/D unit x 1 (Already installed) 3) Toner cartridge x 1 4) Telephone handset x 1 (option) 5) Curled cord and Telephone cord for (4) x 1 (option) 6) Document stacker x 1 7) Line cord x 1 8) One touch sheet x 1 (Already installed) 9) User's guide x 1 10) Quick Start Guide x 1

Copyright 1997, Okidata, Division of OKI America, Inc. All rights reserved. See the OKIDATA Business Partner Exchange (BPX) for any updates to this material. (http://bpx.okidata.com)

Table 1.6.1 shows Reports and Lists Specifications.

Note:
F +OT: Press FUNCTION and One-touch key
FP: Function program setting
TF: Technical function setting

No.	Item	Specifications
01	**Call-back message**	The transmitter sends a call-back message to the receiver only when the receiver does not respond to voice request of the transmitter.
02	**Sender ID**	The fax can transmit a programmed alphanumeric message, such as company's name, consisting of up to 32 characters. **This is an FCC Requirement in the United States.** * (Outside only)
03	**Transmitting subscriber identification (TSI) printing**	Received TSI can be printed at the top of the received page. * TF + 05 (To enable or disable this function)
04	**Cancel report (Power outage report)**	The fax can automatically print out a power-outage report when the power off condition occurs.
05	**Activity report**	The fax can print out an activity report manually, or automatically, when 30 communications are recorded. * REPORT PRINTOUT+1(Manual printout)
06	**Message confirmation report**	The fax can print out a message confirmation report manually or automatically in the following cases. (1) When COPY key is pressed after a single location call, this report can be printed. (Manual printout) * FP + 01 (To enable or disable automatic printing)
07	**Broadcast entry report**	The fax can print out a broadcast entry report if specified during operating sequence of a broadcast.
08	**Broadcast confirmation report**	The fax can print out a broadcast confirmation report manually or automatically. * COPY key (Manual printout): Pressed after a broadcast. * REPORT PRINTOUT + 2 (Manual printout) * FP +02 (To enable or disable automatic printing)
09	**Confidential reception report**	The fax can print out this report automatically on completion of a confidential reception.
10	**Telephone directory**	This directory is printed manually. (REPORT PRINTING +3)
11	**Configuration report**	This report is printed manually. (REPORT PRINTING +4)

Copyright 1997, Okidata, Division of OKI America, Inc. All rights reserved. See the OKIDATA Business Partner Exchange (BPX) for any updates to this material. (http://bpx.okidata.com)

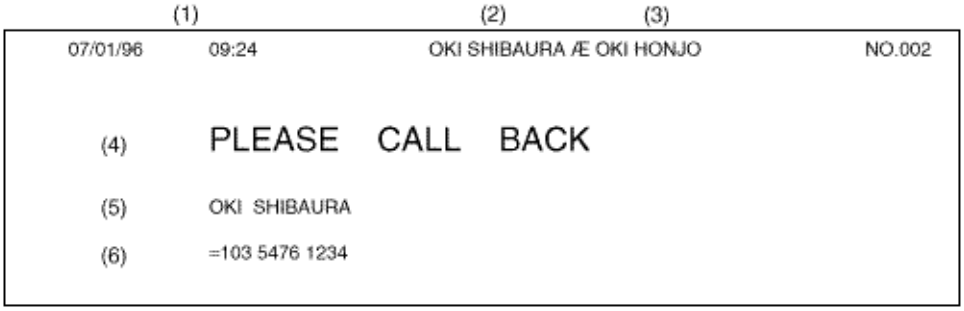

(1) Date and time
(2) Sender ID
(3) CSI/Personal ID
(4) Letters "PLEASE CALL BACK"
(5) Sender ID
(6) Sender's call back telephone number

Copyright 1997, Okidata, Division of OKI America, Inc. All rights reserved. See the OKIDATA Business Partner Exchange (BPX) for any updates to this material. (http://bpx.okidata.com)

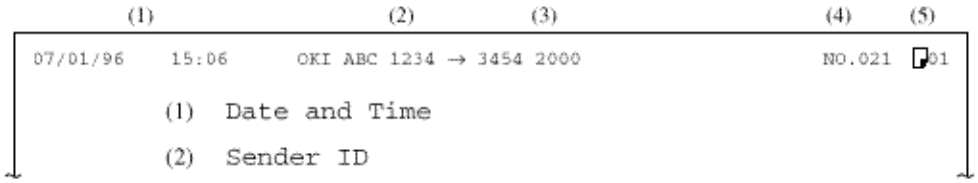

(1) Date and Time
(2) Sender ID
(3) Receiver's CSI/Personal ID
(4) Session number
(5) Page number

Copyright 1997, Okidata, Division of OKI America, Inc. All rights reserved. See the OKIDATA Business Partner Exchange (BPX) for any updates to this material. (http://bpx.okidata.com)

Local Date and Time Printing (Example)

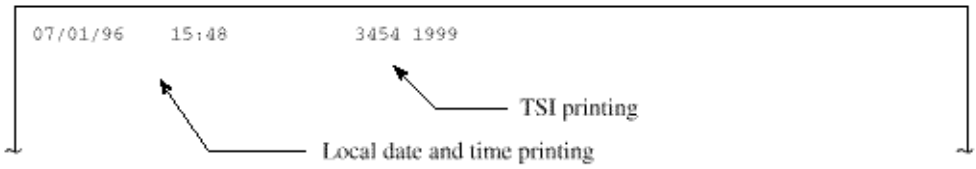

Note: TSI printing (TF+05)
Local date and time printing (TF+04)

Copyright 1997, Okidata, Division of OKI America, Inc. All rights reserved. See the OKIDATA Business Partner Exchange (BPX) for any updates to this material. (http://bpx.okidata.com)

POWER OUTAGE REPORT

05/19/96 17:05
ID=OKI

DATE	TIME	S,R-TIME	DISTANT STATION ID	MODE	PAGES	RESULT	
05/17	10:10		0485-88-3385				9080
05/17	10:30		ODS TAKASAKI		03		0000
05/17	12:05	01'20"	OKI FAX	BOX=01	03	OK	0000
05/17	13:00	00'20"	03-5476-4300	CALLED	01	OK	0000
05/17	15:40		034567092222	FWD-T	05		
05/18	10:50	01'20"	0495-22-5400	CALLED	03	OK	0000
05/18	15:00			B.C.	01		

Note: Memory reception only is printed on the mode in the report as called.

Copyright 1997, Okidata, Division of OKI America, Inc. All rights reserved. See the OKIDATA Business Partner Exchange (BPX) for any updates to this material. (http://bpx.okidata.com)

ACTIVITY REPORT

(2) 05/19/96 17:05
(3) ID=OKI

(4) TOTAL TIME CALLING=08:22' CALLED=17:30'

DATE (5)	TIME (6)	S,R-TIME (7)	DISTANT STATION ID (8)	MODE	PAGES (9)	RESULT (10)	(11)
(12) 17	10:00	01'20"	OKI FAX	CALLING	02	OK	0000
05/17	10:10	01'00"	0485 88 3385	CALLING	00	STOP	9080
05/17	10:30	00'20"	ODS TAKASAKI	CALLING	00	NO	90C1
05/17	12:05	01'20"	OKI FAX	CALLING	03	OK	0000
05/17	13:00	00'20"	03 5476 4300	CALLING	01	OK	0000
05/17	15:40	03'25"	ODS TAKASAKI	BOX=01	03	OK	0000 *1
05/17	19:00	00'00"	OKI FAX		01	OK	0000 *2
05/18	10:10	02'00"	OKI SHIBAURA	CALLED	05	NO	908E
05/18	10:22	00'12"	0495 22 5400	CALLING	00	STOP	9080
05/18	10:50	01'20"	0495 22 5400	CALLED	03	NO	9090
05/18	12:05	00'20"	OKI FAX	CALLING	01	STOP	9080
05/18	15:00	01'30"		CALLED	03	OK	0000 *3
05/18	15:30	00'20"		CALLING	01	OK	0000
05/18	17:05	05'20"		B.C.		COMP.	60A0 *4
05/18	19:04	00'20"	03 5476 4300	CALLING	00	STOP	9080
05/19	09:00	01'11"		CALLING	02	OK	0000
05/19	10:20	00'20"	03 5476 4300	CALLING	02	STOP	9080
05/19	10:35	02'23"		BOX=01	02	OK	0000 *1
05/19	10:50	00'20"	ODS TAKASAKI	CALLED	01		0000
05/19	11:03	00'00"	OKI FAX	CALLING	00	STOP	9080
05/19	13:00	00'24"	03 5476 4300		01	NO	0000 *5
05/19	16:00	03'25"	ODS TAKASAKI	FWD-R	03	OK	0000 *6
05/19	16:04	03'30"	OKIFAX	FWD-T	03	OK	0000 *7

*1 : Confidential reception
*2 : Manual TX
*3 : Memory reception
*4 : Broadcast TX
*5 : Manual reception
*6 : Reception for forwarding
*7 : Forwarding

Explanation of Example

(1) Title of the report
(2) Date and time when the report was printed
(3) Sender ID
(4) Total CALLING and CALLED time
(5) Date of transmission or reception
(6) Time when the communication started
(7) Time span of the fax communication.
(8) Identification of the remote station
Personal ID/Location ID/TSI/CSI/Dial number or space
(9) Communication mode:
CALLING (Transmission)

CALLED (Reception NG or MEMORY RX)
B. C. (Broadcast)
BOX=XX (Confidential reception)
FWD-R (Fax Forwarding RX)
FWD-T (Fax Forwarding TX)
(10) Number of transmitted pages or received pages
(11) Result code
OK (Note1)/NO/STOP (Note 2)/BUSY/PAPER (Out of recording paper)/S_JAM (Document jam)/R_JAM (Recording paper jam)/COVER/COMP (Completion of a broadcast)/PUNIT (Printer Alarm)/CANCL (Confidential reception T.O.)
Note 1: The following cases are included:

- Unmatched handshaking to the received NSF.
- Unmatched password to the received NSC in the polling transmission mode.

Note 2: The following cases are included:
The STOP key is pressed.

- The memory cancellation operation removes the message from the active memory files.

(12) Service code

Copyright 1997, Okidata, Division of OKI America, Inc. All rights reserved. See the OKIDATA Business Partner Exchange (BPX) for any updates to this material. (http://bpx.okidata.com)

Message Confirmation Report

Example 1 of 2

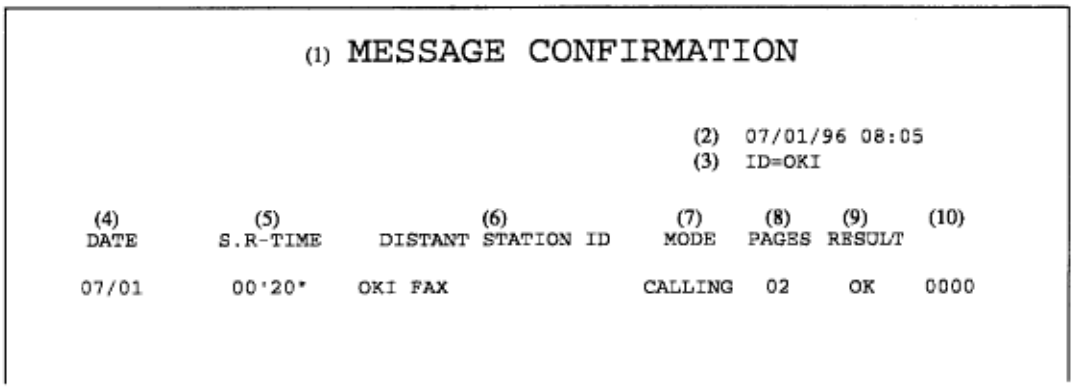

(1) MESSAGE CONFIRMATION

(2) 07/01/96 08:05
(3) ID=OKI

(4) DATE	(5) S.R-TIME	(6) DISTANT STATION ID	(7) MODE	(8) PAGES	(9) RESULT	(10)
07/01	00'20"	OKI FAX	CALLING	02	OK	0000

Example 2 of 2

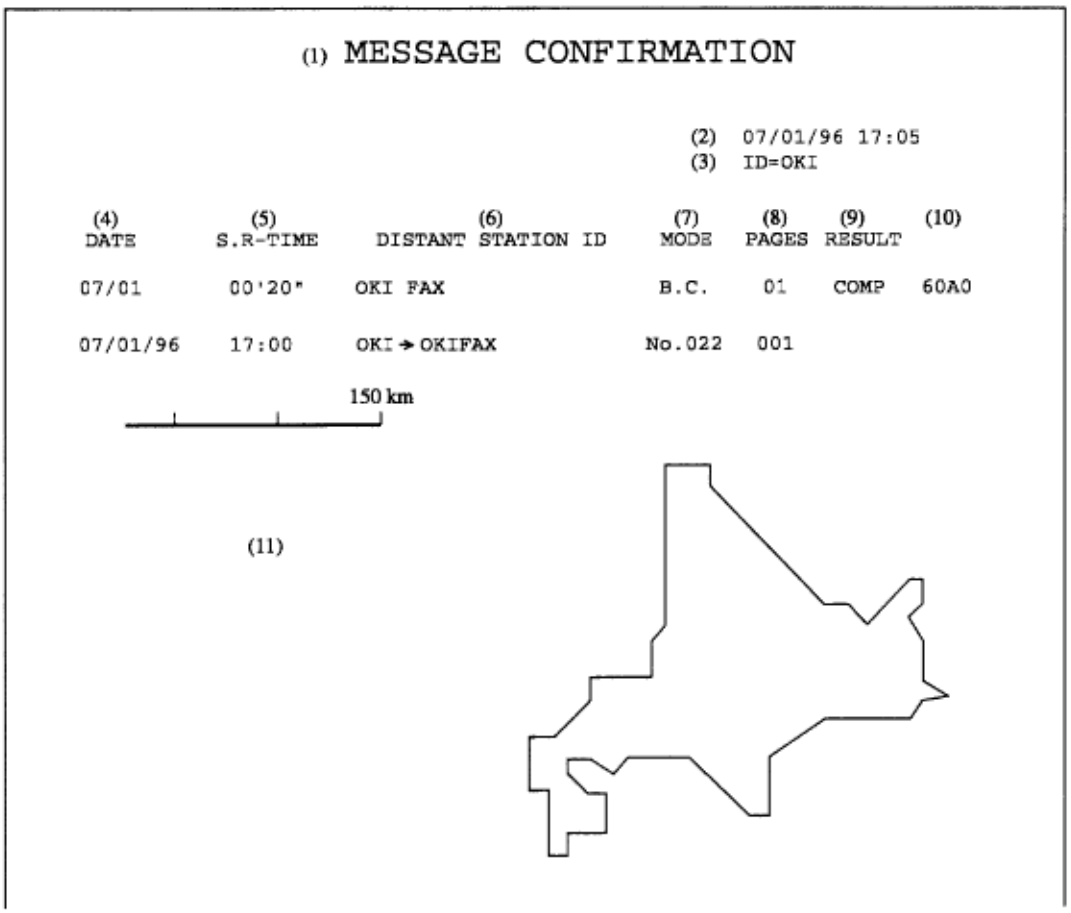

Explanation of Example

(1) Title of the report
(2) Date and time when the report was printed
(3) Sender ID
(4) Date of transmission or reception
(5) Length of time for which the fax was connected to the line
(6) Identification of the remote station
Personal ID/Location ID/TSI/CSI/Dial number
(7) Communication mode
Reference to ACTIVITY REPORT
(8) Number of transmitted pages or received pages
(9) Result of the communication
Reference to ACTIVITY REPORT
(10) Service code
(11) Message

Copyright 1997, Okidata, Division of OKI America, Inc. All rights reserved. See the OKIDATA Business Partner Exchange (BPX) for any updates to this material. (http://bpx.okidata.com)

BROADCAST ENTRY REPORT

07/01/96 17:05
ID=OKI

LOCATION ID	LOCATION ID	LOCATION ID
ONE TOUCH		
1 = OT1	2 = OT2	3 = OT3
4 = OT4	5 = OT5	6 = OT6
7 = OT7	8 = OT8	9 = OT9
10 = OT10 *1	11 = OT11	12 = OT12
13 = OT13	14 = OT14	15 = OT15 *2
16 = OT16	17 = OT17	18 = OT18
19 = OT19	20 = OT20	21 = OT21
22 = OT22	23 = OT23	24 = OT24
25 = OT25	26 = OT26	27 = OT27
28 = OT28	29 = OT29	30 = OT30 *3
AUTO DIAL		
01 = AD1	02 = AD2	03 = AD3
04 = AD4	05 = AD5	06 = AD6
07 = AD7	08 = AD8	09 = AD9
10 = AD10	11 = AD11	12 = AD12
13 = AD13	14 = AD14	15 = AD15
16 = AD16	17 = AD17	18 = AD18
19 = AD19	20 = AD20	21 = AD21
22 = AD22	23 = AD23	24 = AD24
25 = AD25	26 = AD26	27 = AD27
28 = AD28	29 = AD29	30 = AD30
31 = 31	32 = 32	33 = 33
34 = 34	35 = 35	36 = 36
37 = 37	38 = 38	39 = 39
40 = 40	41 = 41	42 = 42
43 = 43	44 = 44	45 = 45 *1
46 = 46	47 = 47	48 = 48
49 = 49	50 = 50	51 = 51
52 = 52	53 = 53	54 = 54
55 = 55	56 = 56	57 = 57
58 = 58	59 = 59	60 = 60
61 = 61	62 = 62	63 = 63
64 = 64 *2	65 = 65	66 = 66
67 = 67	68 = 68	69 = 69
70 = 70	71 = 71	72 = 72
73 = 73	74 = 74	75 = 75
76 = 76	77 = 77	78 = 78
79 = 79	80 = 80	81 = 81
82 = 82	83 = 83	84 = 84
85 = 85	86 = 86	87 = 87
88 = 88	89 = 89	90 = 90
91 = 91	92 = 92	93 = 93
94 = 94	95 = 95	96 = 96
97 = 97	98 = 98	99 = 99

KEYPAD

1234
2345
3456
4567

	MAX. OT	AD	KEYPAD
*1 FX-480 :	10	45	1
*2 FX-050VP :	15	64	5
*3 FX-175VP :	30	99	5

Copyright 1997, Okidata, Division of OKI America, Inc. All rights reserved. See the OKIDATA Business Partner Exchange (BPX) for any updates to this material. (http://bpx.okidata.com)

CONFIDENTIAL RX REPORT

07/01/96 17:05
ID=OKI

DATE	TIME	S,R-TIME	DISTANT STATION ID	MODE	PAGES	RESULT	
07/01	00:20	00'00"	OKI FAX	BOX=01	02	OK	0000

Copyright 1997, Okidata, Division of OKI America, Inc. All rights reserved. See the OKIDATA Business Partner Exchange (BPX) for any updates to this material. (http://bpx.okidata.com)

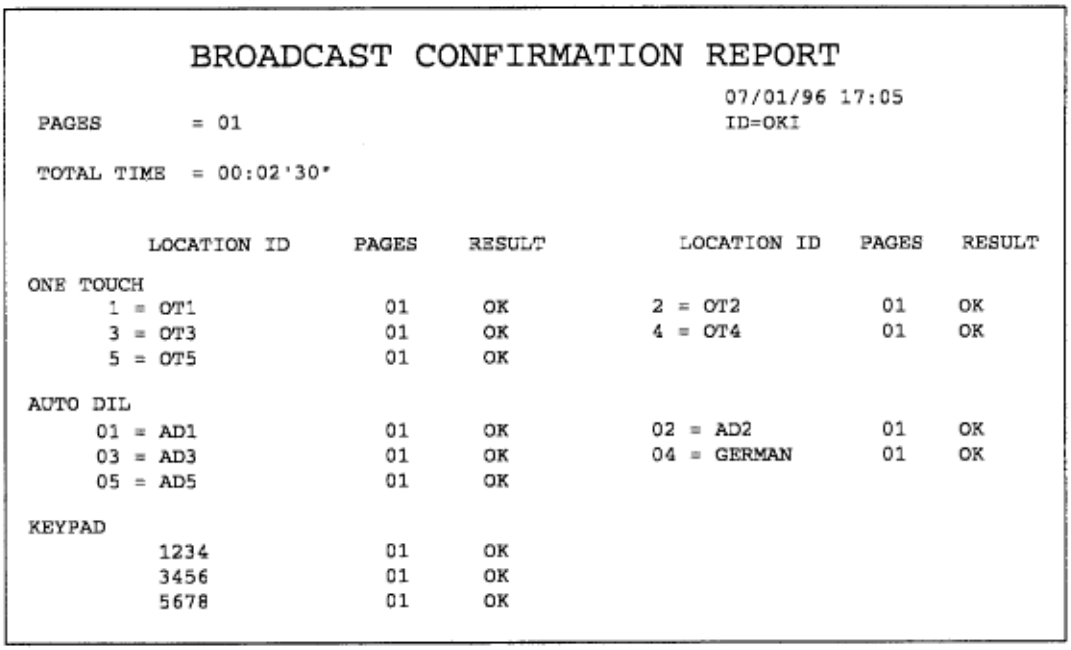

BROADCAST CONFIRMATION REPORT

07/01/96 17:05
ID=OKI

PAGES = 01

TOTAL TIME = 00:02'30"

LOCATION ID	PAGES	RESULT	LOCATION ID	PAGES	RESULT
ONE TOUCH					
1 = OT1	01	OK	2 = OT2	01	OK
3 = OT3	01	OK	4 = OT4	01	OK
5 = OT5	01	OK			
AUTO DIL					
01 = AD1	01	OK	02 = AD2	01	OK
03 = AD3	01	OK	04 = GERMAN	01	OK
05 = AD5	01	OK			
KEYPAD					
1234	01	OK			
3456	01	OK			
5678	01	OK			

Copyright 1997, Okidata, Division of OKI America, Inc. All rights reserved. See the OKIDATA Business Partner Exchange (BPX) for any updates to this material. (http://bpx.okidata.com)

CONFIDENTIAL RX REPORT

07/01/96 17:05
ID=OKI

DATE	TIME	S.R-TIME	DISTANT STATION ID	MODE	PAGES	RESULT	
07/01	00:20	00'00"	OKI FAX	BOX=01	02	OK	0000

Copyright 1997, Okidata, Division of OKI America, Inc. All rights reserved. See the OKIDATA Business Partner Exchange (BPX) for any updates to this material. (http://bpx.okidata.com)

Example 1 of 4

TELEPHONE DIRECTORY P1

07/01/96 18:31
ID=OKI

ONE TOUCH	LOCATION ID		TEL NO.	PRM. ECHO
1	OKI SERVICE		123 123 456	(OFF)
		OR	111 222 333	
2		OR		(OFF)
3		OR		(OFF)
4		OR		(OFF)
5		OR		(OFF)
6		OR		(OFF)
7		OR		(OFF)
8		OR		(OFF)
9		OR		(OFF)
10		OR		(OFF)
11		OR		(OFF)
12		OR		(OFF)
13		OR		(OFF)
14		OR		(OFF)
15		OR		(OFF)

Example 2 of 4

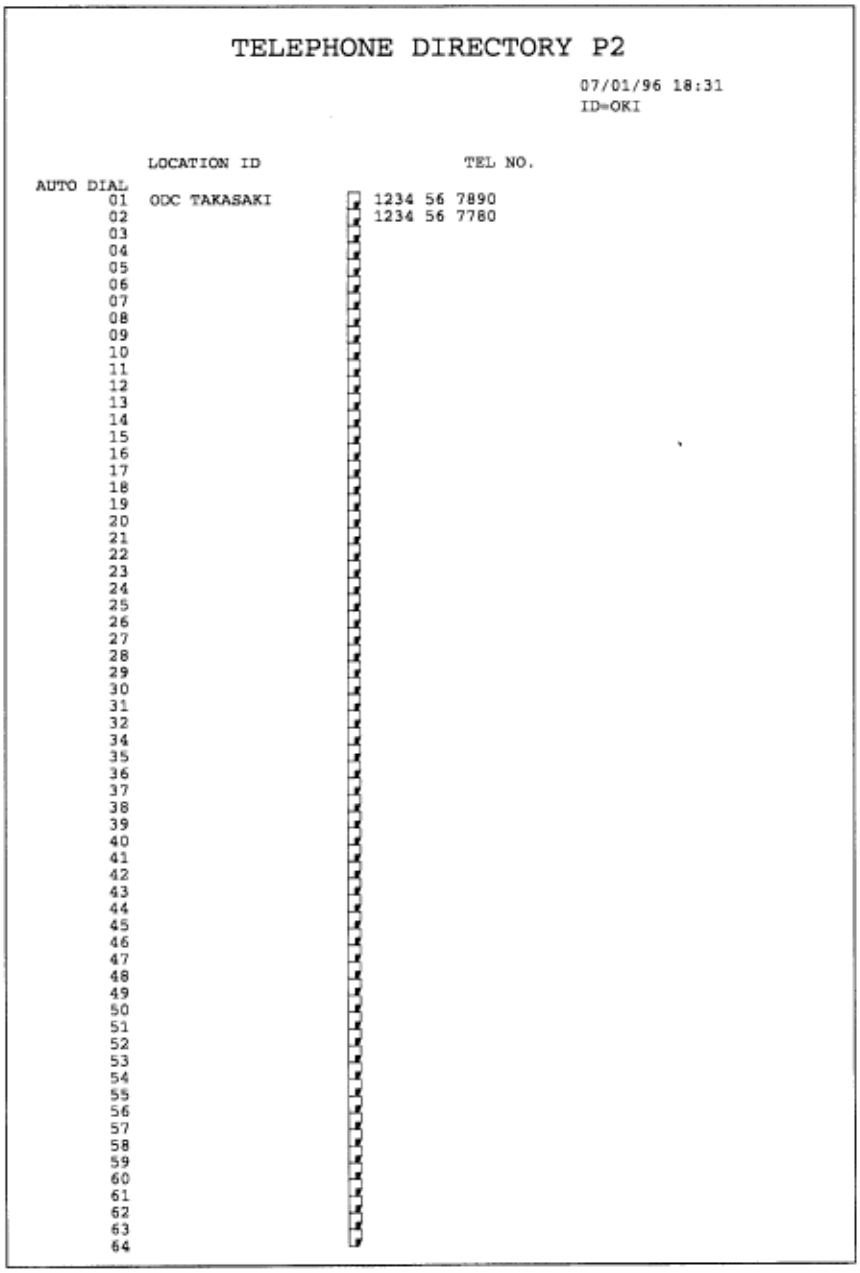

TELEPHONE DIRECTORY P2

07/01/96 18:31
ID=OKI

AUTO DIAL	LOCATION ID	TEL NO.
01	ODC TAKASAKI	1234 56 7890
02		1234 56 7780
03		
04		
05		
06		
07		
08		
09		
10		
11		
12		
13		
14		
15		
16		
17		
18		
19		
20		
21		
22		
23		
24		
25		
26		
27		
28		
29		
30		
31		
32		
34		
35		
36		
37		
38		
39		
40		
41		
42		
43		
44		
45		
46		
47		
48		
49		
50		
51		
52		
53		
54		
55		
56		
57		
58		
59		
60		
61		
62		
63		
64		

Example 3 of 4

TELEPHONE DIRECTORY P3

07/01/96 18:32
ID=OKI

GROUP NUMBER = #1 #2 #3 #4 #5 #6 #7

#1 ONE TOUCH
1 2 3 4 5 6 7 8 9 10 11 12 13 14 15

AUTO DIAL
01 02 03 04 05 06 07 08 09 10 11 12 13 14 15 16 17 18 19 20 21 22 23 24 25
26 27 28 29 30

#2 ONE TOUCH
1 5 10 15

AUTO DIAL
07 30 40

#3 ONE TOUCH

AUTO DIAL

#4 ONE TOUCH

AUTO DIAL

#5 ONE TOUCH

AUTO DIAL

#6 ONE TOUCH

AUTO DIAL

#7 ONE TOUCH

AUTO DIAL

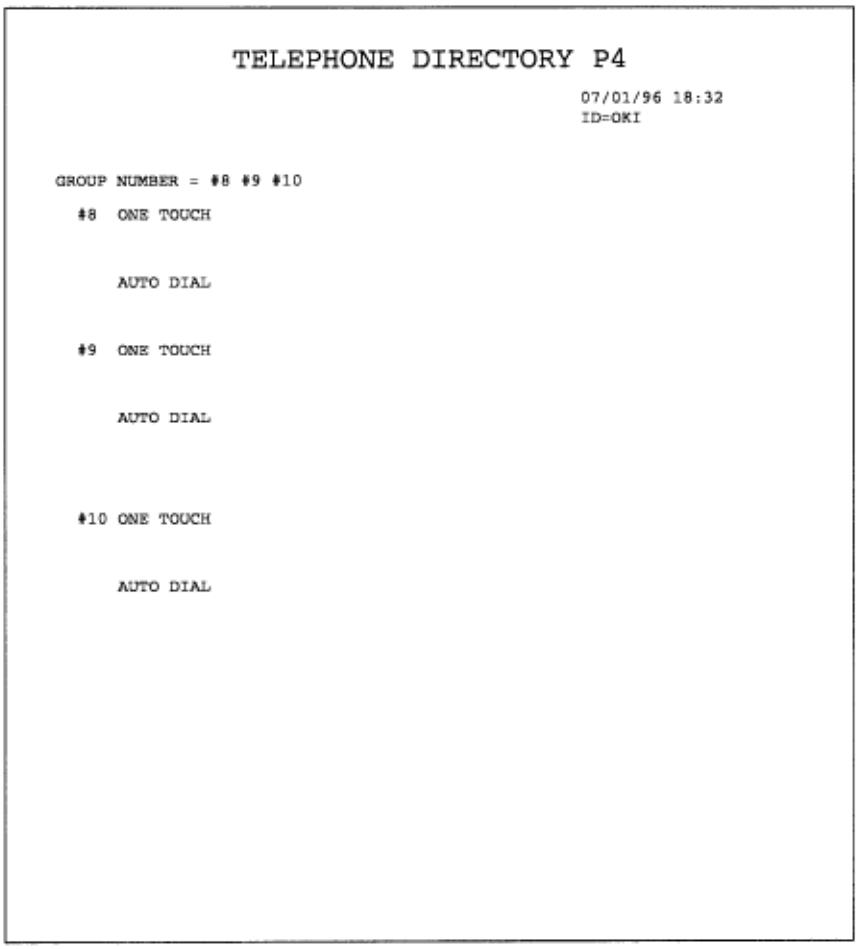

TELEPHONE DIRECTORY P4

07/01/96 18:32
ID=OKI

GROUP NUMBER = #8 #9 #10

#8 ONE TOUCH

AUTO DIAL

#9 ONE TOUCH

AUTO DIAL

#10 ONE TOUCH

AUTO DIAL

Copyright 1997, Okidata, Division of OKI America, Inc. All rights reserved. See the OKIDATA Business Partner Exchange (BPX) for any updates to this material. (http://bpx.okidata.com)

Example 1 of 6

TELEPHONE DIRECTORY P1

07/01/96 17:05
ID=OKI

ONE TOUCH	LOCATION ID	TEL NO.	PRM. ECHO
1	OKI SERVICE	0001 123 345	(ON)
		OR 0101 123 567	
2	ODC	0002	(OFF)
		OR 0102	
3	NEW YORK	0003	(OFF)
		OR 0103	
4	OT4 ABC	0004	(OFF)
		OR 0104	
5	XYZ CO.	0005	(OFF)
		OR 0105 111	
6	UK PLANT	0006 222	(OFF)
		OR 0106	
7	GERMANY	0007	(OFF)
		OR 0107	
8	BT	0008	(OFF)
		OR 0108	
9	FRANCE	0009	(OFF)
		OR 0109	
10	TOKYO	0010	(OFF)
		OR 0011	
11		OR	(OFF)
12		OR	(OFF)
13		OR	(OFF)
14		OR	(OFF)
15		OR	(OFF)
16		OR	(OFF)
17		OR	(OFF)
18		OR	(OFF)
19		OR	(OFF)
20		OR	(OFF)
21		OR	(OFF)
22		OR	(OFF)
23		OR	(OFF)
24		OR	(OFF)
25		OR	(OFF)
26		OR	(OFF)
27		OR	(OFF)
28		OR	(OFF)
29		OR	(OFF)
30		OR	(OFF)

Example 2 of 6

TELEPHONE DIRECTORY P2

07/01/96 17:05
ID=OKI

AUTO DIAL	LOCATION ID	TEL NO.
01	TOKYO OFFICE	1001 111 222
02	PARIS	1002 111 333
03	AMERICA	1003
04	TOKYO 3	1004
05	TOKYO 5	1005
06	UK	1006
07	BT	1007
08	FRANCE	1008
09	GERMANY	1009
10	ITALY	1010
11	SPAIN	1011 567 890
12	DENMARK	1012 571 123
13	FINLAND	1013
14	SWITLAND	1014
15	OSAKA	1015 456 6789
16	TAKASAKI	1016
17	HONJO	1017
18	SHIBAURA	1018
19		
20		
21		
22		
23		
24		
25		
26		
27		
28		
29		
30		
31		
32		
33		
34		
35		
36		
37		
38		
39		
40		
41		
42		
43		
44		
45		
46		
47		
48		
49		
50		
51		
52		
53		
54		
55		
56		
57		
58		
59		
60		
61		
62		
63		
64		

Example 3 of 6

TELEPHONE DIRECTORY P3

07/01/96 17:05
ID=OKI

AUTO DIAL	LOCATION ID	TEL NO.
65		
66		
67		
68		
69		
70		
71		
72		
73		
74		
75		
76		
77		
78		
79		
80		
81		
82		
83		
84		
85		
86		
87		
88		
89		
90		
91		
92		
93		
94		
95		
96		
97		
98		
99	OKIDATA	234 5678

Example 4 of 6

TELEPHONE DIRECTORY P4

07/01/96 17:05
ID=OKI

GROUP NUMBER = #1 #2 #3 #4 #5 #6 #7

#1 ONE TOUCH

1	2	3	4	5	6	7	8	9	10	11	12	13	14	15	16	17	18	19	20	21	22	23	24	25
26	27	28	29	30																				

AUTO DIAL

01	02	03	04	05	06	07	08	09	10	11	12	13	14	15	16	17	18	19	20	21	22	23	24	25
26	27	28	29	30	31	32	33	34	35	36	37	38	39	40	41	42	43	44	45	46	47	48	49	50
51	52	53	54	55	56	57	58	59	60	61	62	63	64	65	66	67	68	69	70	71	72	73	74	75
76	77	78	79	80	81	82	83	84	85	86	87	88	89	90	91	92	93	94	95	96	97	98	99	

#2 ONE TOUCH

AUTO DIAL

#3 ONE TOUCH

AUTO DIAL

#4 ONE TOUCH

AUTO DIAL

#5 ONE TOUCH

AUTO DIAL

#6 ONE TOUCH

AUTO DIAL

#7 ONE TOUCH

AUTO DIAL

Example 5 of 6

TELEPHONE DIRECTORY P5

07/01/96 17:05
ID=OKI

GROUP NUMBER = #8 #9 #10 #11 #12 #13 #14

#8 ONE TOUCH

AUTO DIAL

#9 ONE TOUCH

AUTO DIAL

#10 ONE TOUCH

AUTO DIAL

#11 ONE TOUCH

AUTO DIAL

#12 ONE TOUCH

AUTO DIAL

#13 ONE TOUCH

AUTO DIAL

#14 ONE TOUCH

AUTO DIAL

TELEPHONE DIRECTORY P6

07/01/96 17:05
ID=OKI

GROUP NUMBER = #15 #16 #17 #18 #19 #20

#15 ONE TOUCH

AUTO DIAL

#16 ONE TOUCH

AUTO DIAL

#17 ONE TOUCH

AUTO DIAL

#18 ONE TOUCH

AUTO DIAL

#19 ONE TOUCH

AUTO DIAL

#20 ONE TOUCH

AUTO DIAL

Copyright 1997, Okidata, Division of OKI America, Inc. All rights reserved. See the OKIDATA Business Partner Exchange (BPX) for any updates to this material. (http://bpx.okidata.com)

CONFIGURATION

07/01/96 17:05
ID=OKI

FUNCTION LIST

01:MCF (SINGLE-LOC.) ON	02:MCF (MULTI-LOC.) ON	03:ERR.REPORT (MCF) ON
04:MESSAGE IN MCF ON	05:SENDER ID. ON	06:MONITOR VOLUME LOW
07:BUZZER VOLUME MIDDLE	08:CLOSED NETWORK OFF	09:TX MODE DEFAULT FINE/NORMAL
10:T/F TIMER PRG. 35SEC	11:RING RESPONSE 1RING	12:DISTINCTIVE RING OFF
13:1'ST PAPER SIZE A4	14:2'ND PAPER SIZE *1 A4	15:USER LANGUAGE ENGLISH
16:INCOMING RING ON	17:REMOTE RECEIVE OFF	18:MEM./FEEDER SWITCH MEMORY
19:POWER SAVE MODE ON	20:ECM FUNCTION ON	21:REMOTE DIAGNOSIS OFF
22:PC/FAX SWITCH *2 ON		

TEL NO. = 12345678901234567890
CALL BACK NO. = 12345678901234567890
FORWARD TEL NO. = 12345678901234567890

REDIAL TRIES	3TRY	REDIAL INTERVAL	3MIN
DIAL TONE DETECT	OFF	BUSY TONE DETECT	ON
MF(TONE)/DP(PULSE)	MF	PULSE DIAL RATE	10PPS
PALUSE MAKE RATIO	39%	PULSE DIAL TYPE	NORMAL
MF (TONE) DURATION	100MSEC	PBX LINE	OFF
PBX TYPE	NORMAL	AUTO START	ON
DIAL PREFIX	OFF	IT2 DETECT	ON *3

*1 Function 14 is printed when 2'nd Tray is installed.
*2 Function No.22 is printed when CTR board is installed.
*3 In case of country code=FRE

Copyright 1997, Okidata, Division of OKI America, Inc. All rights reserved. See the OKIDATA Business Partner Exchange (BPX) for any updates to this material. (http://bpx.okidata.com)

CONFIGURATION

07/01/96 17:05
ID=OKI

FUNCTION LIST

01:SERVICE BIT ON	02:MONITOR CONT. OFF	03:COUNTRY CODE USA
04:TIME/DATE PRINT OFF	05:TSI PRINT OFF	06:NO TONER MEM. RX ON
07:TAD MODE TYPE2	08:REAL TIME DIAL TYPE2	09:TEL/FAX SWITCH ON
10:MDY/DMY. MDY	11:LONG DOC. SCAN OFF	12:TONE FOR ECHO OFF
13:MH ONLY OFF	14:H/MODEM RATE 14.4K	15:T1 (TX) TIMER VALUE 59SEC
16:T1 (RX) TIMER VALUE 35 SEC	17:T2 TIMER VALUE 10 SEC	18:DIS BIT32 ON
19:ERR. CRITERION VALUE 10	20:OFF HOOK BYPASS OFF	21:NL EQUALIZER 0DB
22:ATTENUATOR 10DB	23:T/F TONE ATT. 10DB	24:MF ATT. 6DB
25:RING DURA. * 10MS 12	26:CML TIMING * 100MS 3	27:LED HEAD STROBE 10100
28:LED HEAD WIDTH TYPE1	29:MEDIA TYPE MEDIUM	30:TR LATCH CURRENT +1
31:SYMBOL RATE 3200		

Note: No. 30 is only for the OKIOFFICE 44.
No. 31 is only for OKIFAX 5600.

Copyright 1997, Okidata, Division of OKI America, Inc. All rights reserved. See the OKIDATA Business Partner Exchange (BPX) for any updates to this material. (http://bpx.okidata.com)

This sectionThe following flowchart outlines the installation procedure.

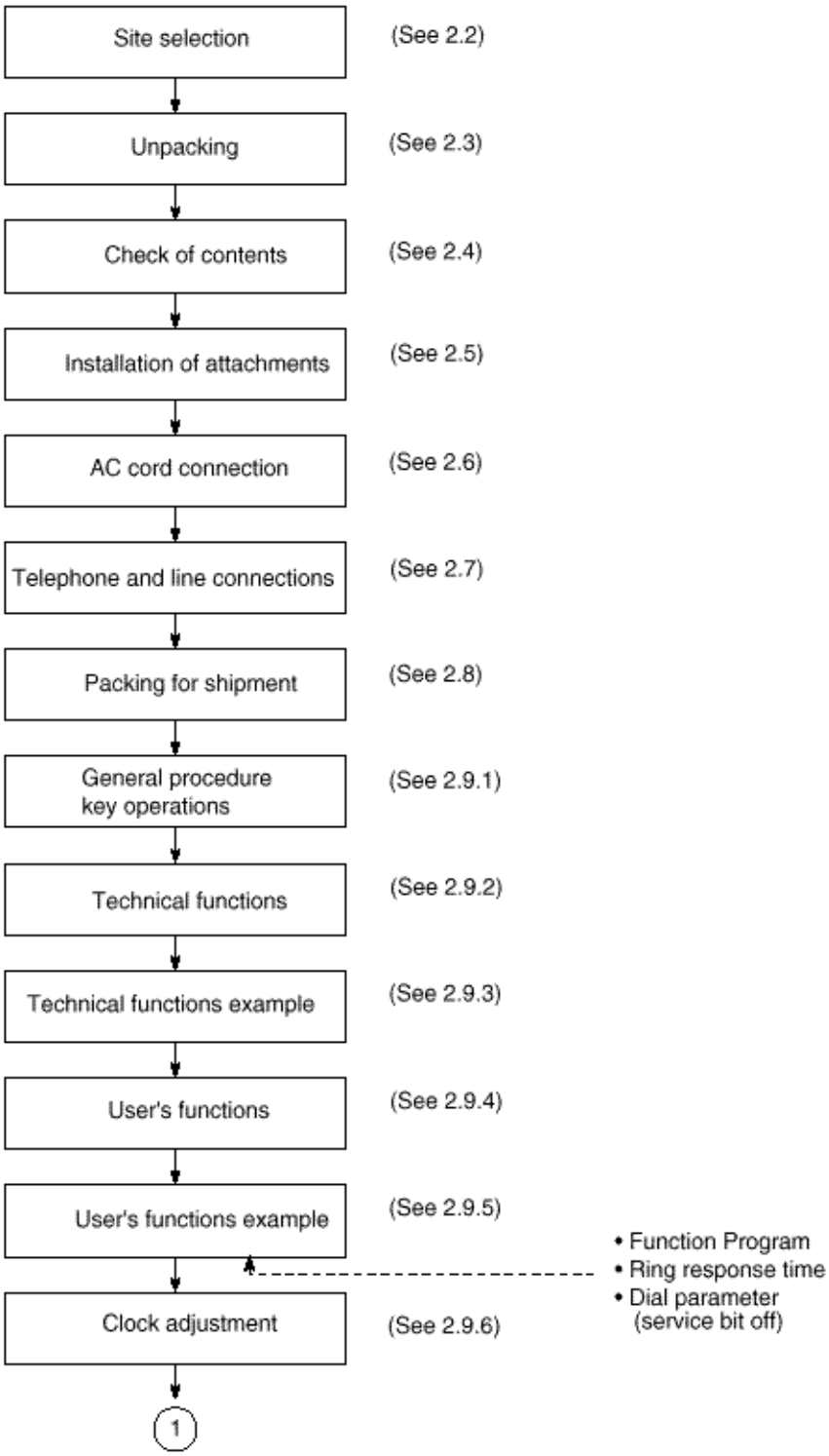
Site selection
(See 2.2)
Unpacking
(See 2.3)
Check of contents
(See 2.4)
Installation of attachments
(See 2.5)
AC cord connection
(See 2.6)
Telephone and line connections
(See 2.7)
Packing for shipment
(See 2.8)
General procedure
key operations
(See 2.9.1)
Technical functions
(See 2.9.2)
Technical functions example
(See 2.9.3)
User's functions
(See 2.9.4)
User's functions example
(See 2.9.5)
• Function Program
• Ring response time
• Dial parameter
(service bit off)
Clock adjustment
(See 2.9.6)
1

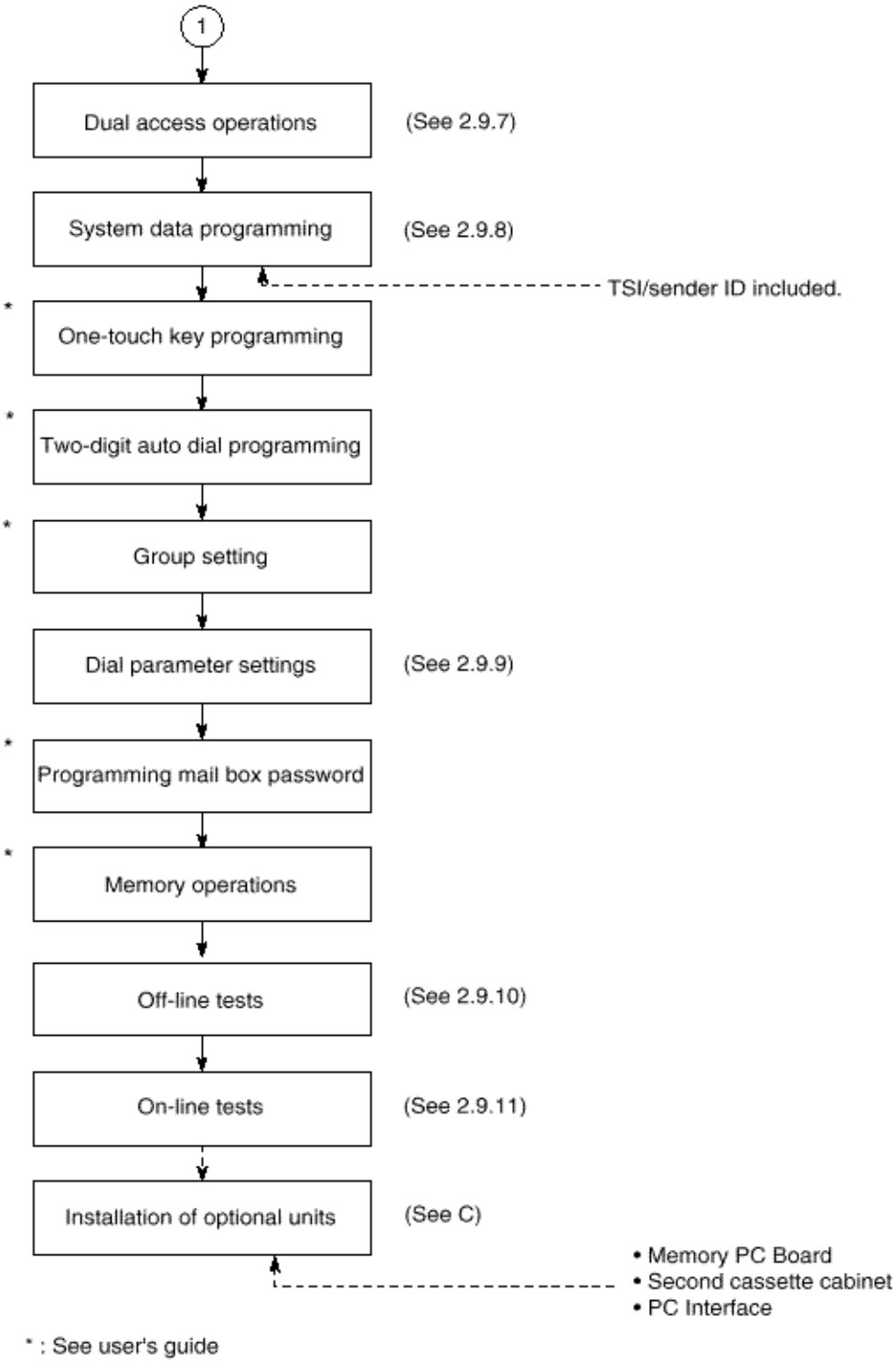

Copyright 1997, Okidata, Division of OKI America, Inc. All rights reserved. See the OKIDATA Business Partner Exchange (BPX) for any updates to this material. (http://bpx.okidata.com)

Precautions for Installation

(01) Fluctuation in line voltage
- 120VAC (102V to 127V)
- 230VAC (198V to 264V)

(02) Room temperature
50 to 90°F (10 to 32°C)

(03) Humidity
20 to 80% RH

(04) Operating environment
Pressure:
Equivalent to altitude of 2500 m (8,203 feet) and below.

(05) Exposure
Do not expose the image drum unit to direct light for more than five minutes.

(06) Levelness of installation surface
1 degree max.

(07) Other requirements
Avoid installing in any of the following places:
- A place exposed to direct sunlight
- A place near a heat source or exposed to vibration
- A dusty place
- A place in the atmosphere of acid gas, or steam etc.,
- A place exposed to quick temperature changes

(08) Required space for installation
The facsimile requires the space (as shown) for safety and good operability.

Note: 1 This space is necessary for handling the handset. (option)
2 This space is necessary for removing the recording paper cassette.
3 This space is necessary for installing the document stacker and to allow space for the fan exhaust.

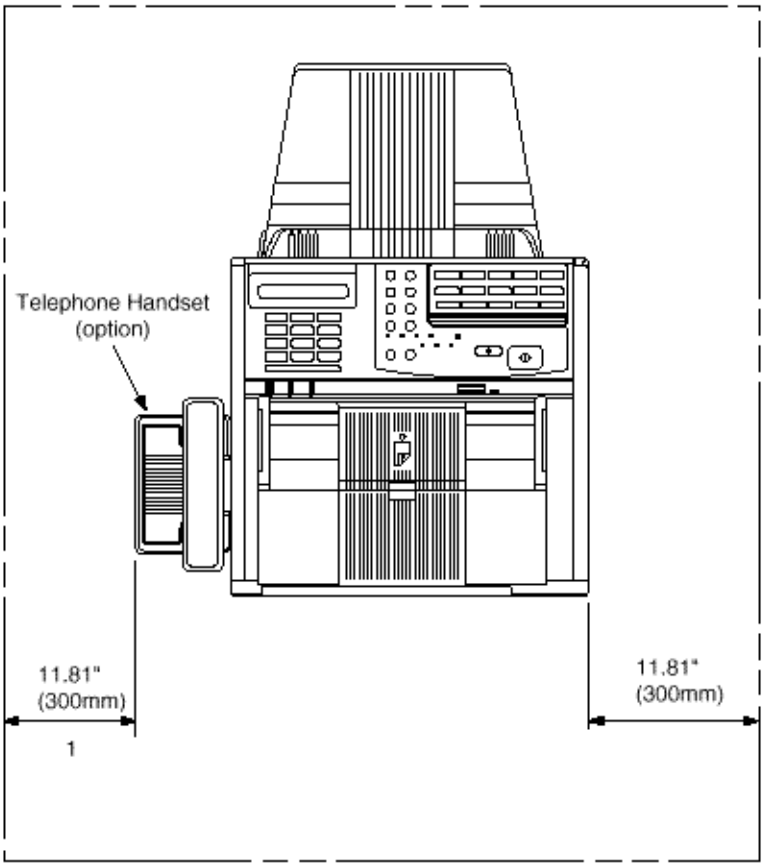

FX-050VP-C2-001

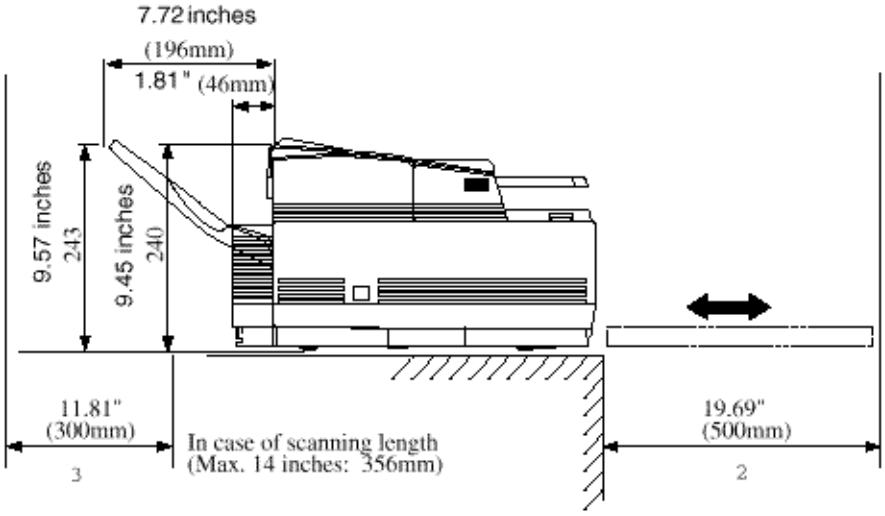

Copyright 1997, Okidata, Division of OKI America, Inc. All rights reserved. See the OKIDATA Business Partner Exchange (BPX) for any updates to this material. (http://bpx.okidata.com)

2.3.1 Procedure

(01) Remove tape on the top of the carton box and open its cover.

Unpacking Procedure 1 (Figure 2.3.1.1)

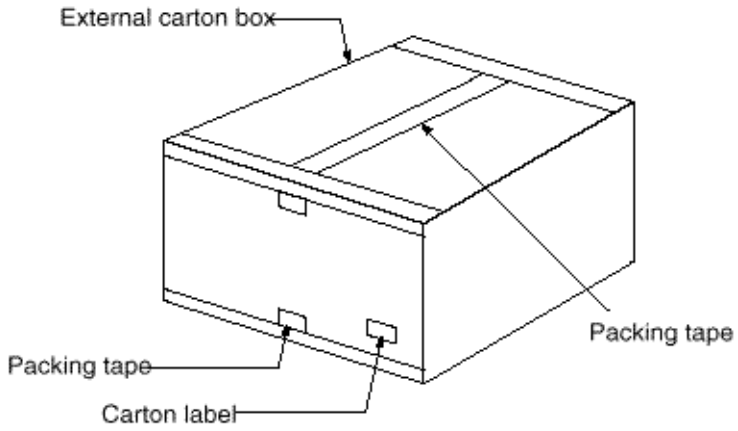

(02) Take out the accessory box from the carton box.
(See Figure 2.3.2.1)

(03) Take out the machine with plastic wrapper from the box.
Unpacking Procedure 2 (Figure 2.3.2.1)

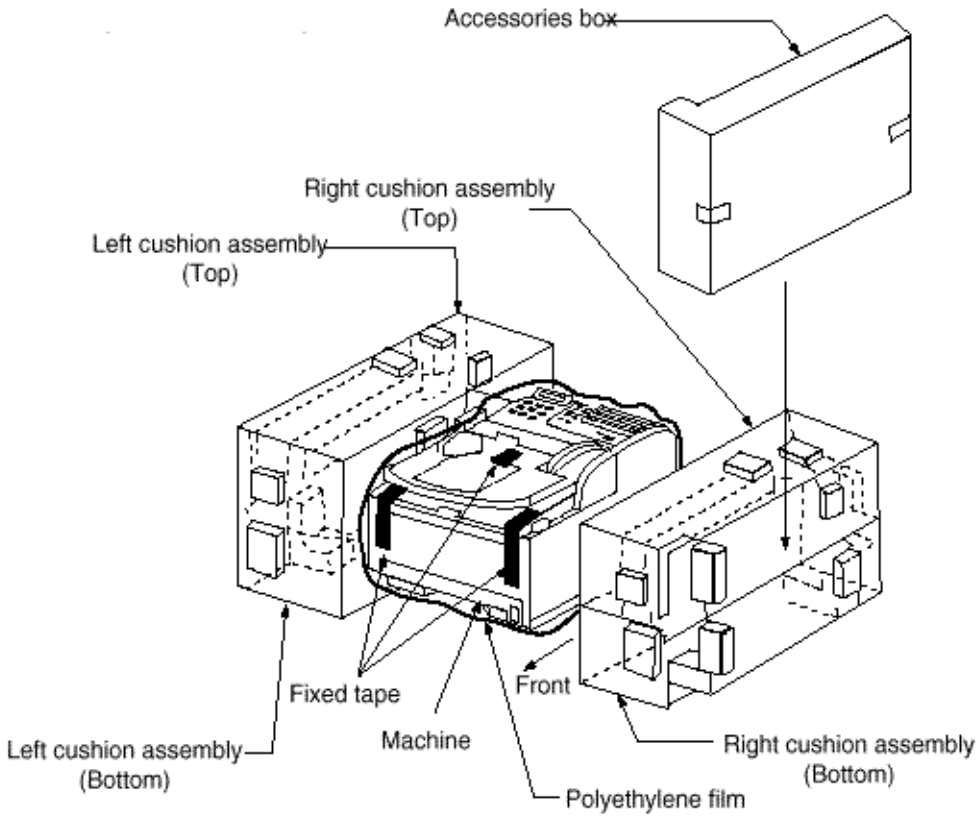

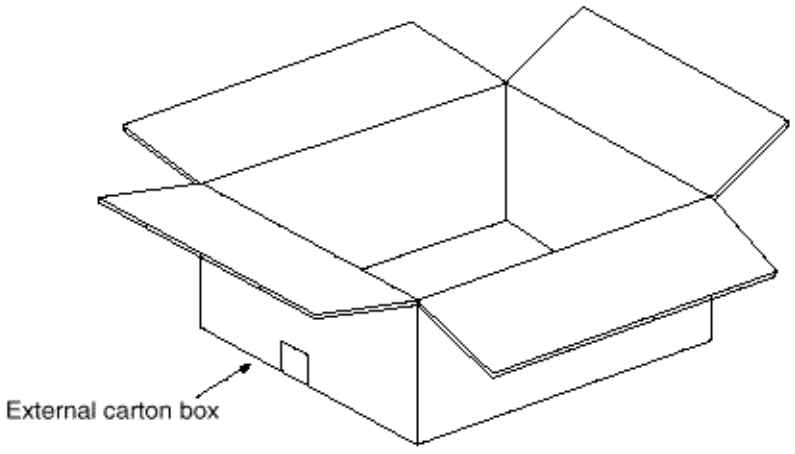

Unpacking Procedure 3 (Figure 2.3.2.2)

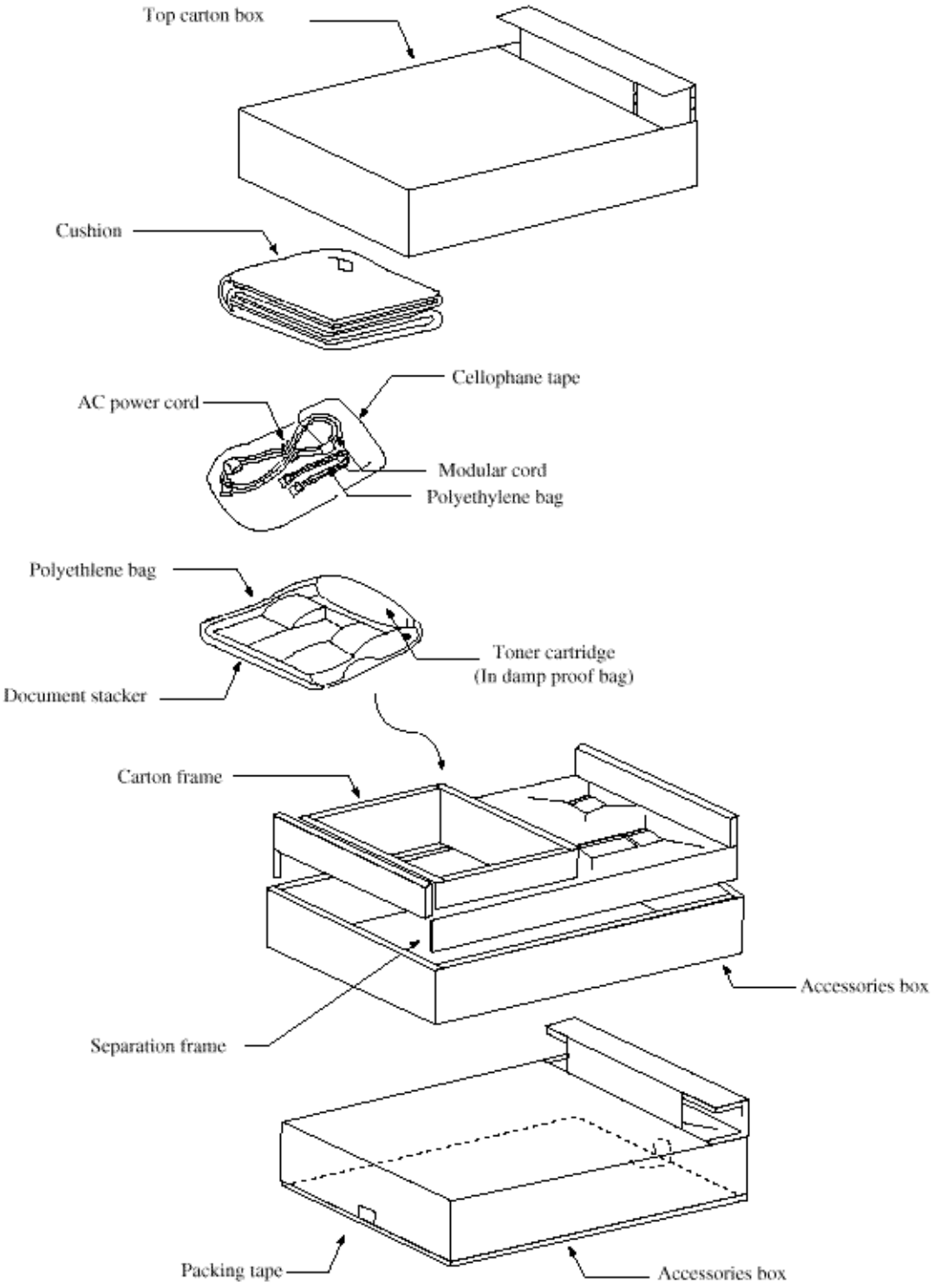

Copyright 1997, Okidata, Division of OKI America, Inc. All rights reserved. See the OKIDATA Business Partner Exchange (BPX) for any updates to this material. (http://bpx.okidata.com)

After having taken out the machine and accompanied accessories from the carton box, check the contents according to the following list:

Contents List (Table 2.4.2)

Item No.	Name	Q'ty	Remarks
1	OKIFAX 5300 or OKIFAX 5600	1	
2	AC power cord	1	
3	Image Drum	1	Already installed.
4	Toner cartridge	1	
5	Document stacker	1	
6	Line cord	1	
7	One touch sheet	1	Already installed.
8	User's Documentation		
9	Quick Start Guide	1	

Copyright 1997, Okidata, Division of OKI America, Inc. All rights reserved. See the OKIDATA Business Partner Exchange (BPX) for any updates to this material. (http://bpx.okidata.com)

(01) Items

- Image Drum (ID) Unit (already installed)
- Toner cartridge
- Recording paper
- Document stacker

(02) Procedure

1) Toner cartridge

- Peel off the fixed tape attached to the copy stacker.
- Open the document table and copy stacker.
- Take the cushion out of the ID unit.

Toner Cartridge Installation (Figure 2.5.2.1)

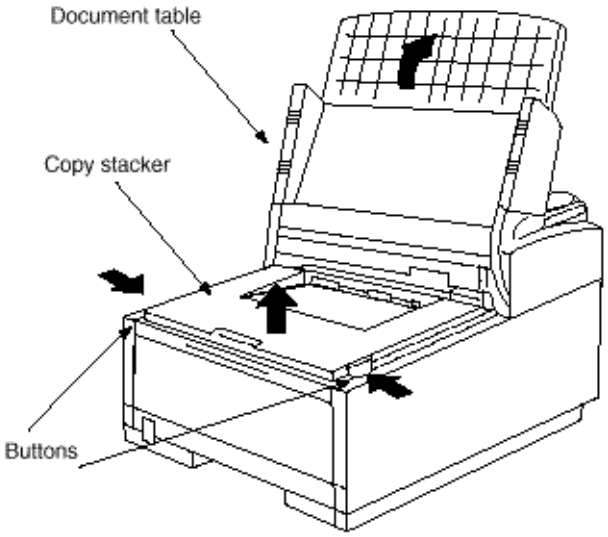

Toner Cartridge Installation 2 (Figure 2.5.2.2)

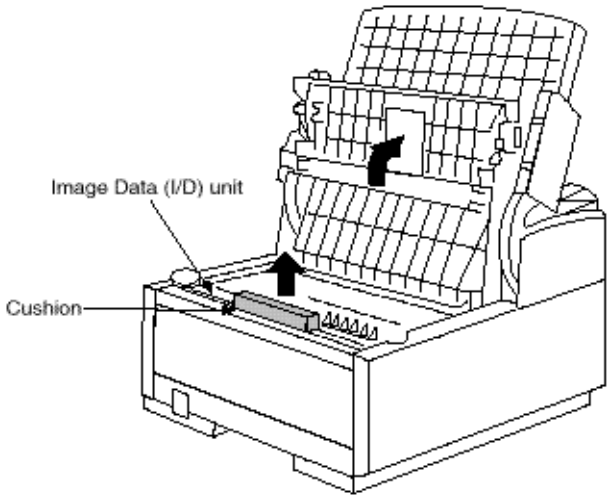

Toner Cartridge Installation 3 (Figure 2.5.2.3)

- Take out the toner cartridge from the damp proof bag, shake it five or six times as shown in the illustration to eliminate the toner deflection, and peel off the seal gently.

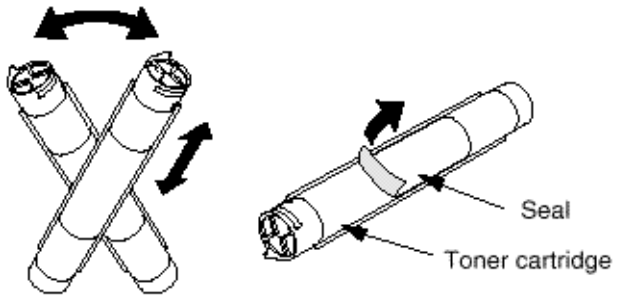

- Ensure that the plastic tab on the right-hand side of the toner cartridge recess lines up with the groove on the toner cartridge.

- Press down on both ends to make sure the cartridge is fully seated.

Toner Cartridge Installation 4 (Figure 2.5.2.4)

- Push the blue tab forward until it stops.

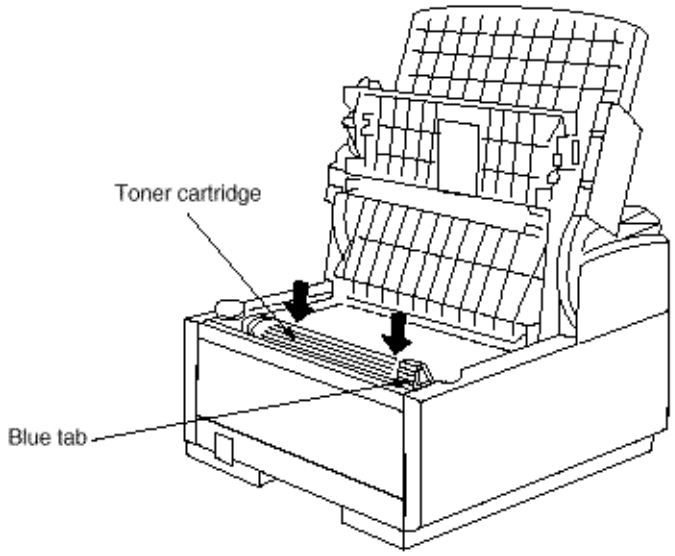

Toner Cartridge Installation 5 (Figure 2.5.2.5)

- Clean the toner scattered in the vicinity of the toner cartridge using a cloth moistened with cold water. Do not use hot water since it makes the toner stick there.

- Close the copy stacker until the buttons have been locked completely.

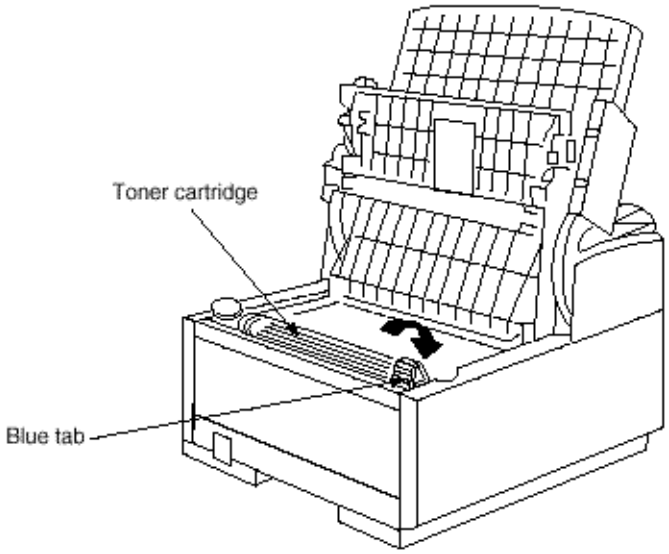

Recording Paper Cassette Installation 1 (Figure 2.5.2.6)

(3) Recording paper

Note: About 250 sheets of the new paper can be set in the recording paper cassette.

- Remove the paper cassette from the facsimile by pulling the cassette tab.

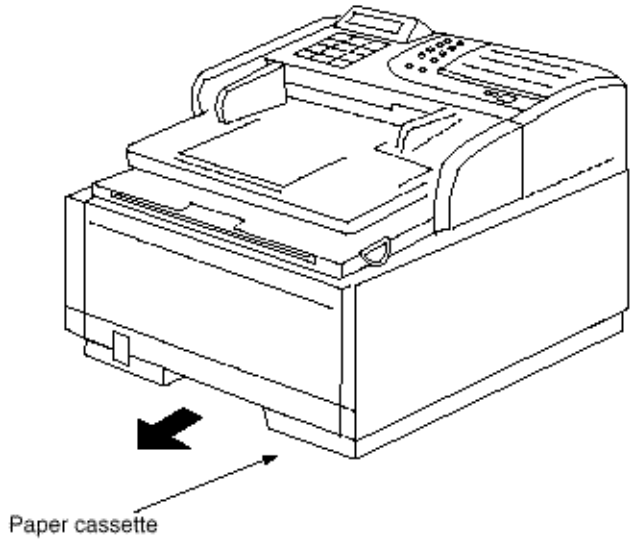

- Sheets must not exceed the paper full marker of the new paper limit indication. If excessive sheets are set, it will cause paper jams.
- After loading the new paper, push it forward into the slot at the front of the facsimile until it locks.

Recording Paper Cassette Installation 2 (Figure 2.5.2.7)

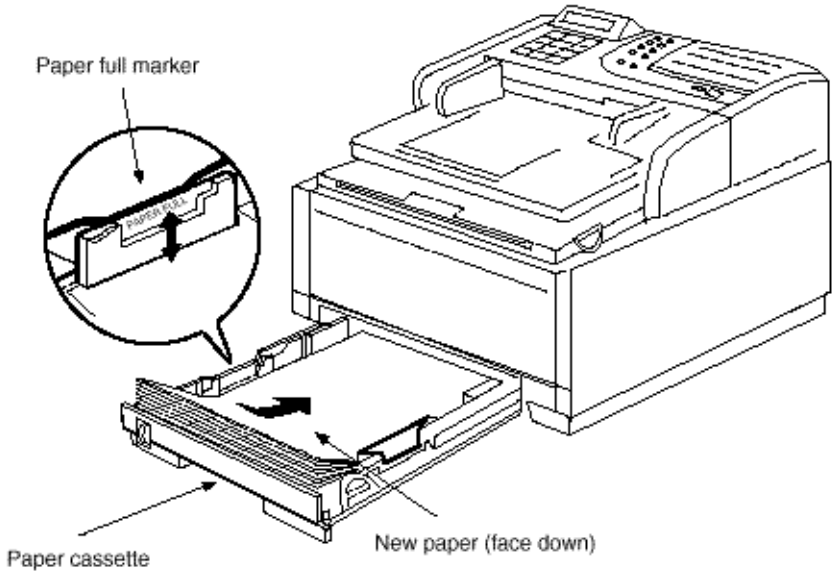

Document Stacker Installation Figure 2.5.2.8

(4) Document stacker

- Place the document stacker into the hanging position.

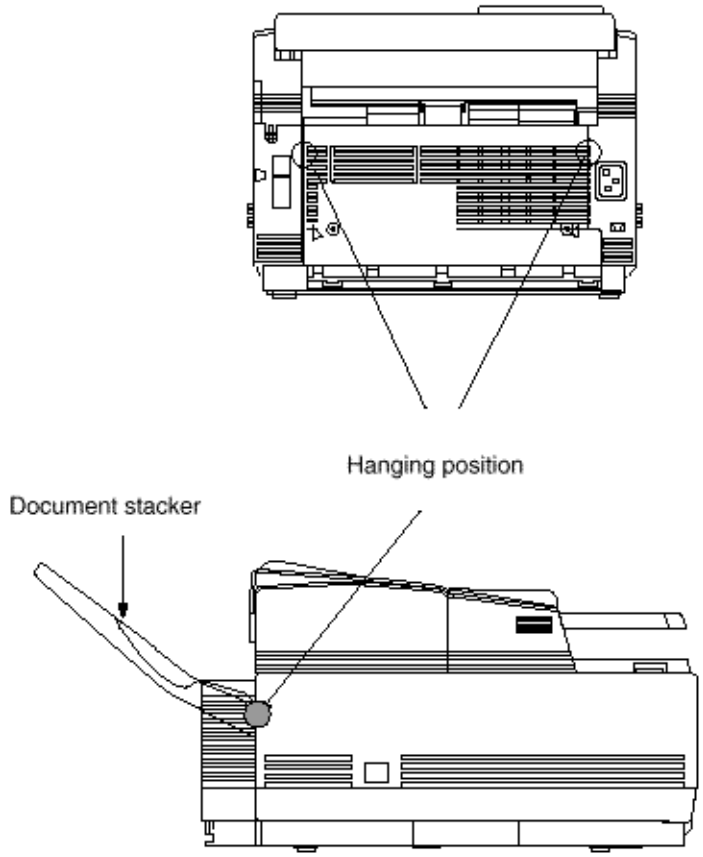

Copyright 1997, Okidata, Division of OKI America, Inc. All rights reserved. See the OKIDATA Business Partner Exchange (BPX) for any updates to this material. (http://bpx.okidata.com)

The power supply is provided as follows.

Nominal input voltage 120VAC (Voltage range 102 to 127VAC)
Nominal input voltage 230VAC (Voltage range 198 to 250VAC)

Check whether the AC voltage of your input is within the above-mentioned voltage range.
If so, check that the power switch is turned OFF.
After turning off the power switch, connect the female plug of the AC cord to the machine.
Insert the male plug of the AC cord to the inlet receptacle.
Turn the power switch ON.
Verify that the display shows the "(Time)" message indicating the standby mode.

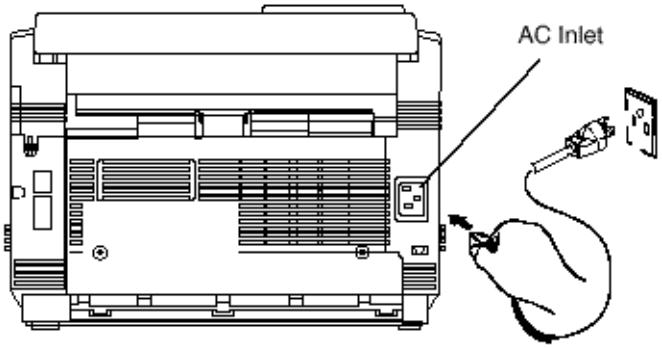

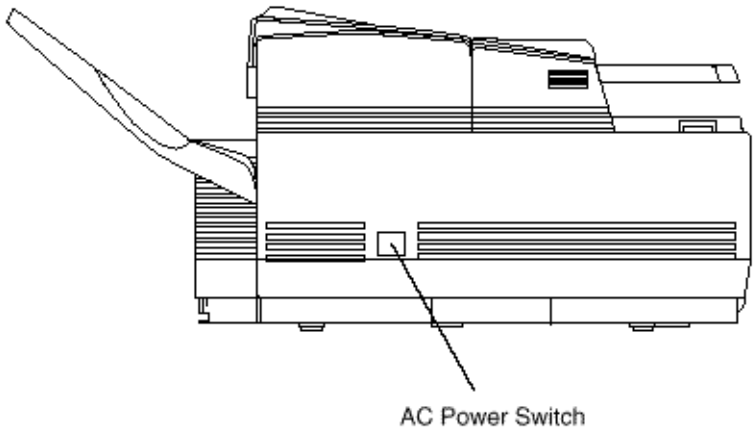

Copyright 1997, Okidata, Division of OKI America, Inc. All rights reserved. See the OKIDATA Business Partner Exchange (BPX) for any updates to this material. (http://bpx.okidata.com)

(1) Procedure

- Connect the lines.

Telephone and Line Connections (Figure 2.7.1)

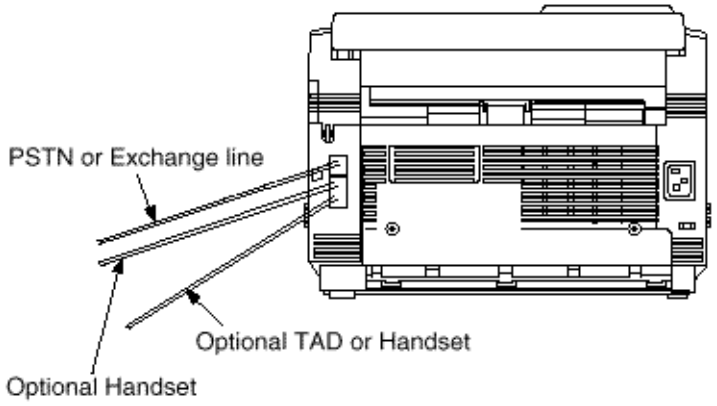

Copyright 1997, Okidata, Division of OKI America, Inc. All rights reserved. See the OKIDATA Business Partner Exchange (BPX) for any updates to this material. (http://bpx.okidata.com)

CAUTION: When packing the unit for shipment, REMOVE THE IMAGE DRUM AND TONER FROM THE UNIT AND SHIP SEPARATELY!
Failure to do so will result in damage to the machine.

Copyright 1997, Okidata, Division of OKI America, Inc. All rights reserved. See the OKIDATA Business Partner Exchange (BPX) for any updates to this material. (http://bpx.okidata.com)

2.9.1 Key Operation Flowchart (Figure 2.9.1)

2.9.2 Technical Functions

2.9.3 Technical Functions Example

2.9.4 User's Functions

2.9.5 User's Functions Examples

2.9.6 Clock Adjustment

2.9.7 Dual Access Operation

2.9.8 System Data Programming

2.9.9 Dial Parameter Settings

2.9.10 Off-line Tests

2.9.11 On-line Tests

Copyright 1997, Okidata, Division of OKI America, Inc. All rights reserved. See the OKIDATA Business Partner Exchange (BPX) for any updates to this material. (http://bpx.okidata.com)

The Key Operation Flowchart is shown on the following pages.

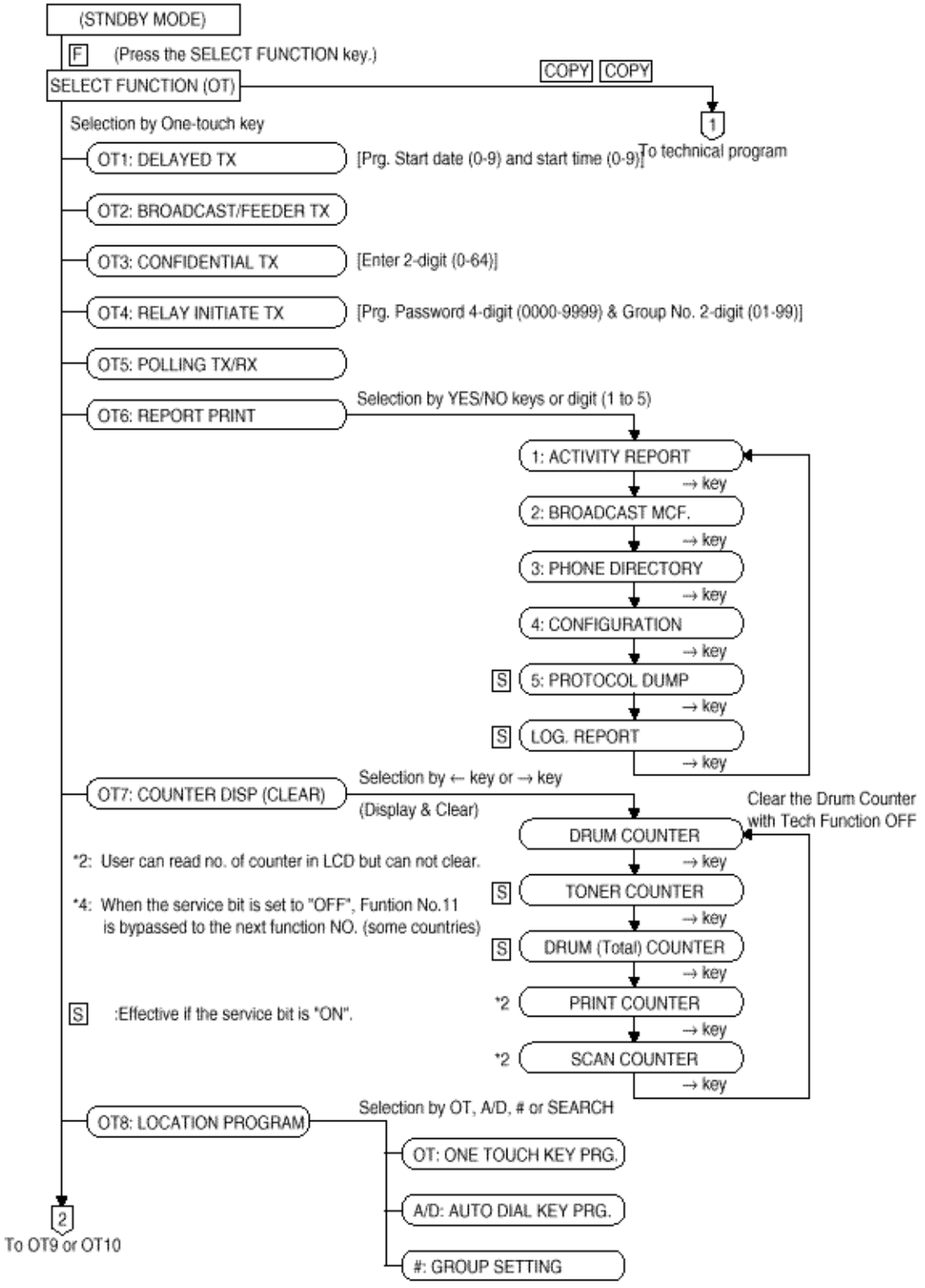
(STNDBY MODE)
F
(Press the SELECT FUNCTION key.)
SELECT FUNCTION (OT)
COPY COPY
1
To technical program
Selection by One-touch key
OT1: DELAYED TX
[Prg. Start date (0-9) and start time (0-9)]
OT2: BROADCAST/FEEDER TX
OT3: CONFIDENTIAL TX
[Enter 2-digit (0-64)]
OT4: RELAY INITIATE TX
[Prg. Password 4-digit (0000-9999) & Group No. 2-digit (01-99)]
OT5: POLLING TX/RX
OT6: REPORT PRINT
Selection by YES/NO keys or digit (1 to 5)
1: ACTIVITY REPORT
→ key
2: BROADCAST MCF.
→ key
3: PHONE DIRECTORY
→ key
4: CONFIGURATION
→ key
S
5: PROTOCOL DUMP
→ key
S
LOG. REPORT
→ key
OT7: COUNTER DISP (CLEAR)
Selection by ← key or → key
(Display & Clear)
Clear the Drum Counter with Tech Function OFF
DRUM COUNTER
→ key
S
TONER COUNTER
→ key
S
DRUM (Total) COUNTER
→ key
*2
PRINT COUNTER
→ key
*2
SCAN COUNTER
→ key
*2: User can read no. of counter in LCD but can not clear.
*4: When the service bit is set to "OFF", Funtion No.11 is bypassed to the next function NO. (some countries)
S :Effective if the service bit is "ON".
OT8: LOCATION PROGRAM
Selection by OT, A/D, # or SEARCH
OT: ONE TOUCH KEY PRG.
A/D: AUTO DIAL KEY PRG.
#: GROUP SETTING
2
To OT9 or OT10

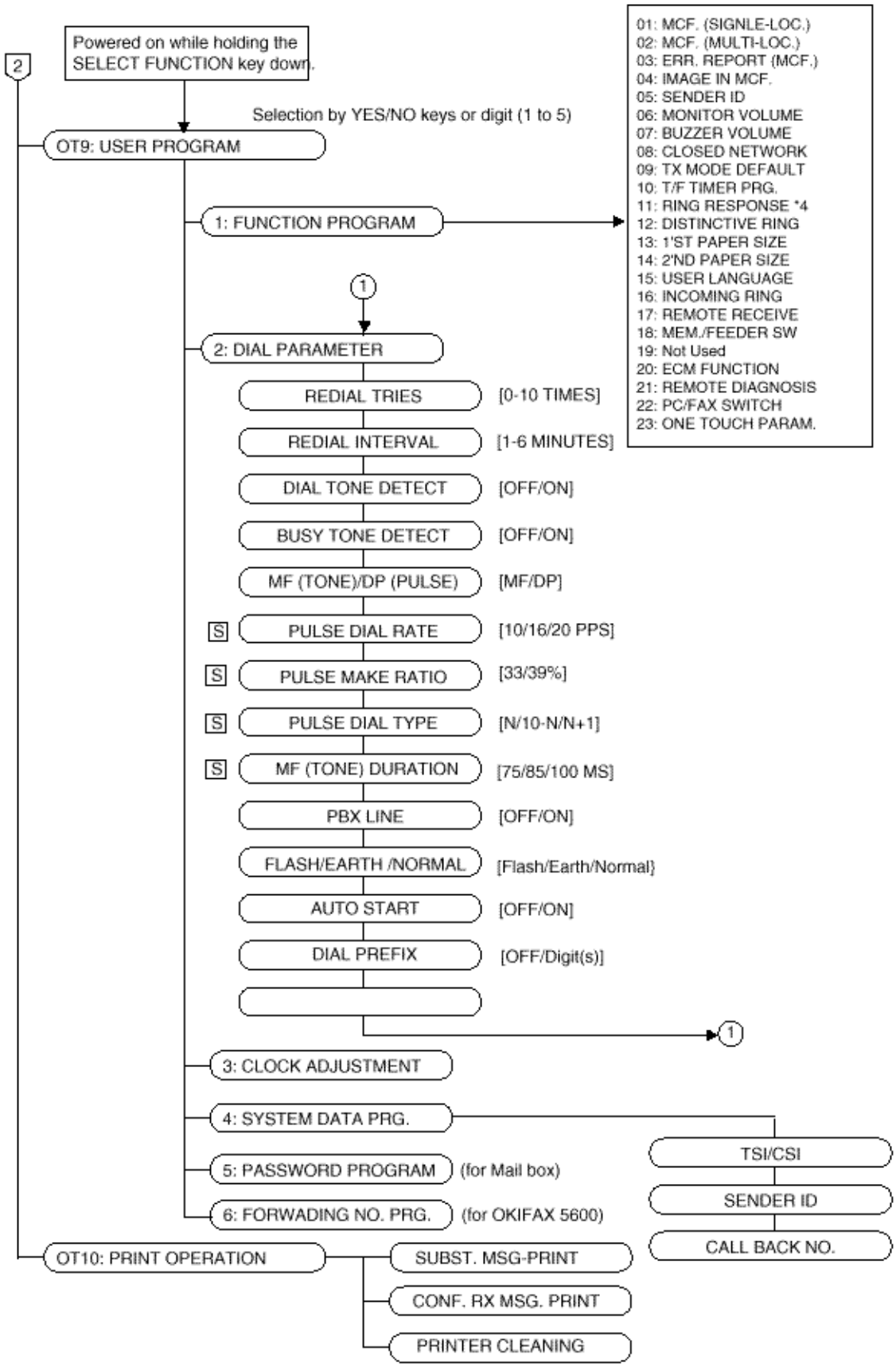
2
Powered on while holding the SELECT FUNCTION key down.
Selection by YES/NO keys or digit (1 to 5)
OT9: USER PROGRAM
1: FUNCTION PROGRAM
01: MCF. (SIGNLE-LOC.)
02: MCF. (MULTI-LOC.)
03: ERR. REPORT (MCF.)
04: IMAGE IN MCF.
05: SENDER ID
06: MONITOR VOLUME
07: BUZZER VOLUME
08: CLOSED NETWORK
09: TX MODE DEFAULT
10: T/F TIMER PRG.
11: RING RESPONSE *4
12: DISTINCTIVE RING
13: 1'ST PAPER SIZE
14: 2'ND PAPER SIZE
15: USER LANGUAGE
16: INCOMING RING
17: REMOTE RECEIVE
18: MEM./FEEDER SW
19: Not Used
20: ECM FUNCTION
21: REMOTE DIAGNOSIS
22: PC/FAX SWITCH
23: ONE TOUCH PARAM.
1
2: DIAL PARAMETER
REDIAL TRIES [0-10 TIMES]
REDIAL INTERVAL [1-6 MINUTES]
DIAL TONE DETECT [OFF/ON]
BUSY TONE DETECT [OFF/ON]
MF (TONE)/DP (PULSE) [MF/DP]
S PULSE DIAL RATE [10/16/20 PPS]
S PULSE MAKE RATIO [33/39%]
S PULSE DIAL TYPE [N/10-N/N+1]
S MF (TONE) DURATION [75/85/100 MS]
PBX LINE [OFF/ON]
FLASH/EARTH /NORMAL [Flash/Earth/Normal}
AUTO START [OFF/ON]
DIAL PREFIX [OFF/Digit(s)]
1
3: CLOCK ADJUSTMENT
4: SYSTEM DATA PRG.
TSI/CSI
SENDER ID
CALL BACK NO.
5: PASSWORD PROGRAM (for Mail box)
6: FORWADING NO. PRG. (for OKIFAX 5600)
OT10: PRINT OPERATION
SUBST. MSG-PRINT
CONF. RX MSG. PRINT
PRINTER CLEANING

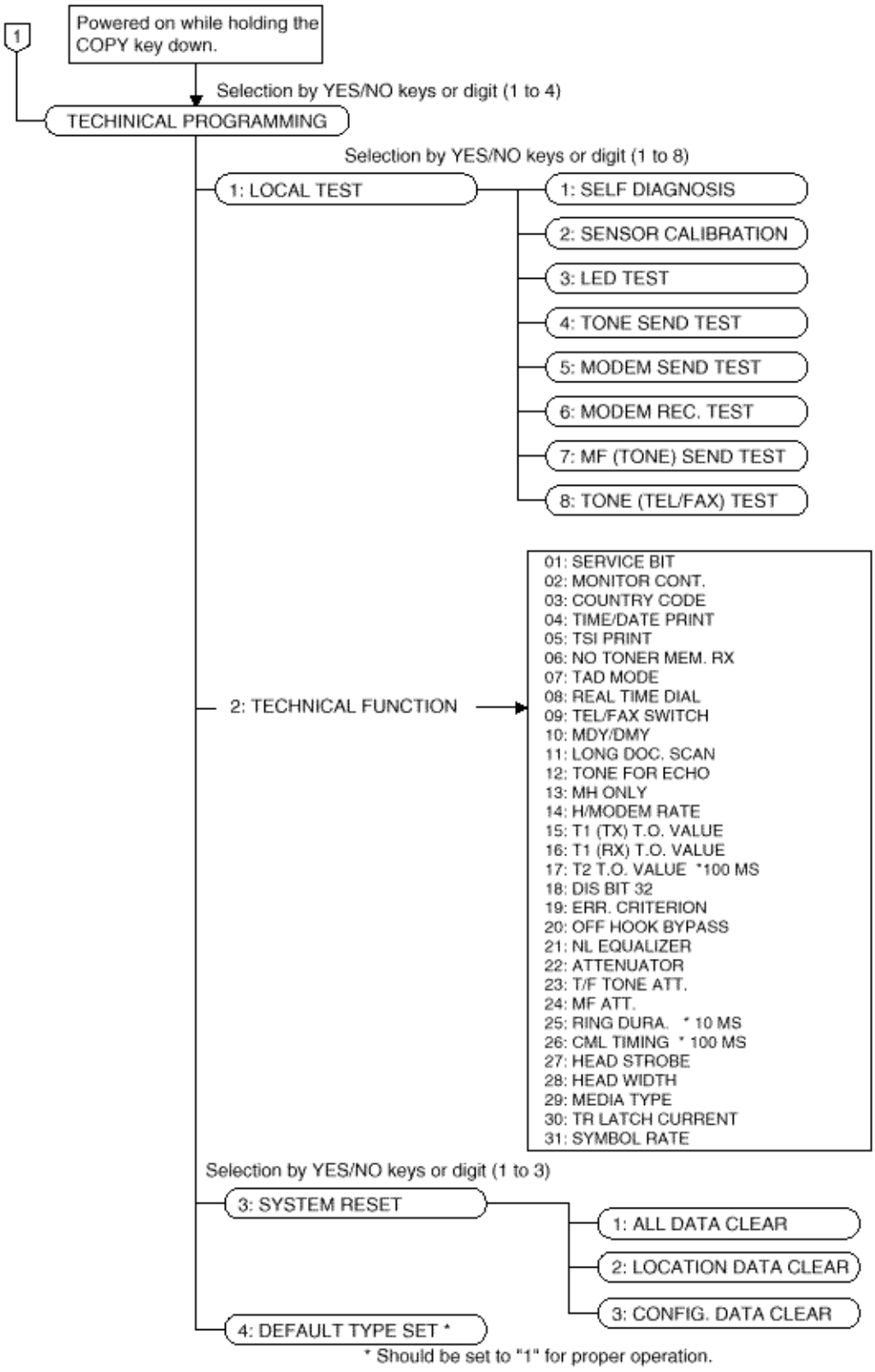
1
Powered on while holding the COPY key down.
Selection by YES/NO keys or digit (1 to 4)
TECHINICAL PROGRAMMING
Selection by YES/NO keys or digit (1 to 8)
1: LOCAL TEST
1: SELF DIAGNOSIS
2: SENSOR CALIBRATION
3: LED TEST
4: TONE SEND TEST
5: MODEM SEND TEST
6: MODEM REC. TEST
7: MF (TONE) SEND TEST
8: TONE (TEL/FAX) TEST
2: TECHNICAL FUNCTION
01: SERVICE BIT
02: MONITOR CONT.
03: COUNTRY CODE
04: TIME/DATE PRINT
05: TSI PRINT
06: NO TONER MEM. RX
07: TAD MODE
08: REAL TIME DIAL
09: TEL/FAX SWITCH
10: MDY/DMY
11: LONG DOC. SCAN
12: TONE FOR ECHO
13: MH ONLY
14: H/MODEM RATE
15: T1 (TX) T.O. VALUE
16: T1 (RX) T.O. VALUE
17: T2 T.O. VALUE *100 MS
18: DIS BIT 32
19: ERR. CRITERION
20: OFF HOOK BYPASS
21: NL EQUALIZER
22: ATTENUATOR
23: T/F TONE ATT.
24: MF ATT.
25: RING DURA. * 10 MS
26: CML TIMING * 100 MS
27: HEAD STROBE
28: HEAD WIDTH
29: MEDIA TYPE
30: TR LATCH CURRENT
31: SYMBOL RATE
Selection by YES/NO keys or digit (1 to 3)
3: SYSTEM RESET
1: ALL DATA CLEAR
2: LOCATION DATA CLEAR
3: CONFIG. DATA CLEAR
4: DEFAULT TYPE SET *
* Should be set to "1" for proper operation.

Copyright 1997, Okidata, Division of OKI America, Inc. All rights reserved. See the OKIDATA Business Partner Exchange (BPX) for any updates to this material. (http://bpx.okidata.com)

This section explains setting items generally conducted by service personnel, not by users.

Table 2.9.1 shows the initial setting items and their purposes. (The default settings differ by country.) Each item can be accessed by entering the corresponding service number on Technical Function.

The detailed procedures of the initial setting items will be explained on the following pages.

Note 1:
S-ON: Effective if the service bit has been set to ON.
FP: Function program setting
TF: Technical function setting

Note 2:
The fonts displayed on the LCD operation panel may differ from fonts written this manual.

Copyright 1997, Okidata, Division of OKI America, Inc. All rights reserved. See the OKIDATA Business Partner Exchange (BPX) for any updates to this material. (http://bpx.okidata.com)

This table shows the initial setting items and their purposes. The default settings may differ by country. Each item can be accessed by entering the corresponding service number on Technical Function.

Note:
S-ON: Effective if the service bit has been set to ON.
FP: Function program setting
TF: Technical function setting

T.F. No.	Item	Specifications	Default
01	Service bit	Switching serviceman/user operation. ON : Service personnel's features are available. OFF : Service personnel's features are not available. To enable or disable the following functions: ● Drum (Total) and toner counter clear ● Protocol dump ● Dial parameters ● etc.	OFF
02	Line monitor control	To enable continuous monitoring of phone line for technical troubleshooting. FP +06 (To select the loudness of monitoring) ON : Enable OFF : Disable Example: In case of transmission mode, the monitor will be available during dialing, but the monitor will be switched off automatically after the elapse of specified time (about 5 sec.). However, when TF02 is set to ON, the monitor is available during communication also.	OFF
03	Country code	Selecting the following country code: USA, INT'L, GBR, IRL, NOR, SWE, FIN, DEN, GER, HUN, TCH, POL, SUI, AUT, BEL, HOL, FRE, ESP, ITA, GRE, AUS, NZL, SIN, HNG	USA
04	Time and date print	Enables or disables the function of printing local date and time at the top of the received page. OFF/ ONCE/ALL selectable. **Note:** ● Set at receiver.	OFF

05	TSI print	Switches the function of printing TSI data from remote fax onto the received pages. TSI is printed at the leading edge of first reproduced copy. (Set at receiver.) When TF04 is set to "ALL", TSI is printed for the all received pages. ON : Enable OFF : Disable (Reference) TSI; Transmitting Subscriber Identification	ON
06	No-toner memory reception	Enables or disables the memory reception when the fax is in no toner condition. ON : The messages are printed when toner has been newly supplied or an operator performs the memory operation (OT10). OFF : The messages are printed in the print mode. But print quality is not guaranteed.	OFF
07	TAD mode	For an external telephone answering device. Allows the OKIFAX to share a telephone line with an answering device. If the REMOTE RX Function is set to a value other than OFF, that conde can be used to force FAX RX during TAD MODE. TAD mode is of two types (TYPE1/TYPE2). OFF/TYPE1/TYPE2 selectable. TYPE1 1. RING comes. 2. The TAD answers, returns the recorded voice message in TAD to calling party. 3. The FAX machine will continue to detect CNG signal while TAD works. 4. If the FAX machine detects CNG signal, the fax will go into normal receiving mode. 5. Even though the fax does not detect CNG signal, the fax will go to receiving mode in hook-on condition. TYPE2 The function from No. 1 to No. 4 of upper TYPE2 are the same as TYPE1. 5. If the fax does not detect CNG signal during working of TAD, the machine will go to standby mode.	TYPE2
08	Real time dialing	Enables or disables the real time dialing. 3 types selectable. (OFF/TYPE1/TYPE2) TYPE1: Real-time dialing is available when the optional telephone handset is OFF-HOOK. TYPE2: Real-time dialing is available when the optional telephone handset is OFF-HOOK or HOOK key is pressed.	TYPE 2
09	TEL/FAX switching	Enables or disables the TEl/FAX automatic switching. ON : Enable OFF : Disable (Related item: FP10, TF23)	ON

<table>
<tr><td>10</td><td>MDY/DMY</td><td>Switches LCD display and report print from month/day/year to day/month/year or vice versa.
MDY/DMY selectable.</td><td>MDY</td></tr>
<tr><td>11</td><td>Long document SCAN</td><td>Switches the function of transmitting long-size document (more than 380 mm).
ON : Unlimited (1 Hour)
OFF : 380 mm. (14.96 inches)</td><td>OFF</td></tr>
<tr><td>12</td><td>Echo Protection</td><td>Enables Echo Suppression for poor lines with echo, usually during overseas transmissions.
This bit setting controls the following features.
ON: Enables
OFF: Disables

<table><tr><td>Echo Protection</td><td>OFF</td><td>ON</td></tr><tr><td>Ignore 1st DIS</td><td>OFF</td><td>ON</td></tr><tr><td>CED-DIS timer</td><td>75 ms</td><td>1.5 sec</td></tr><tr><td>Tone for echo</td><td>OFF</td><td>ON</td></tr></table>
(TF-12 table)</td><td>OFF</td></tr>
<tr><td>13</td><td>MH only</td><td>Switches the function of limiting image compression only to the MH codes.
This affects all communications, and should only be used as a last resort.
ON : Coding scheme is MH only. When the receiving image data is affected by noise on the telephone line.
OFF : Any of MH, MR and MMR.</td><td>OFF</td></tr>
<tr><td>14</td><td>High-speed modem rate</td><td>Specifies the modem's starting speed, 33.6K, 28.8K, 14.4k, 9.6k, or 4.8kbps.
Note: The following protocol is added to OKIFAX 5600:
ITU-T standard V.34 for 33.6K or 28.8 kbps operation.</td><td>28.8</td></tr>
<tr><td>15</td><td>T1 (TX), timeout value</td><td>Registers the time duration (in seconds) for which the fax waits for the remote station's answer.
This timer starts when the last dialed digit has been sent in the automatic transmission mode.
* Selects the 3 digit timer 010 to 255 sec (in one second steps)</td><td>059 sec.</td></tr>
<tr><td>16</td><td>T1 (RX), timeout value</td><td>T1 (RX), timeout value (later) Registers the time duration (in seconds) for which the fax waits for the remote station's answer. This timer starts after the DIS is transmitted, and checked this timer by the transmission timing signal. If T1 times out, the fax disconnects the line.
* Selects the 3 digit timer 010 to 255 sec (in one second steps)</td><td>035 sec</td></tr>
<tr><td>17</td><td>T2, timeout value</td><td>T2, timeout value (layer) Registers the time duration (in seconds) for which the fax detects the EOL interval during reception of phase
C. The fax disconnects the line when EOL can not detect within T2 timer.
* Selects the 3 digit timer
001 to 255 selectable. (in 100ms steps)
For example: 060 x 100 ms =6 s</td><td>130 sec</td></tr>
</table>

18	DIS bit 32	Specifies whether to transmit a bit 32 in DIS. ON : Transmits a bit 32 OFF: Disable **Note:** Disable only if communication / compatibility problems occur with an older remote machine.	ON
19	Error criterion	Registers the threshold value whether to transmit RTN or MCF signal when the error occurs in received data. 00% to 99% selectable. (in one percent steps)	10 %
20	Off-hook bypass	Allows two OKIFAX machines to be connected back-to-back for testing purposes. ON : Enable OFF: Disable	OFF
21	NL equalizer	Selects equalization for the following cable lengths: 0 km/1.8 km/3.6 km/ 7.2 km selectable. **Note:** Relative to 1700Hz for length of 0.4mm diameter cable.	0 km
22	Modem attenuator	Adjusts the attenuation (dB) for the transmit signal power level. Adjusting value is 0 to 15 dB in one dB steps. Since the maximum send signal power level (dB) of the fax is at 0 dB, you can select 0 dB to -15 dB in one dB steps for the send signal power level. 0 to 15 dB. selectable	10 dB
23	T/F tone attenuator (for TEL/ FAX SW)	Adjusts the attenuation (dB) for the quasi-ring back tone send signal of TEL/FAX switching. Adjusting value is 0 to 15 dB in one dB steps.	10 dB
24	MF attenuator	Adjusts the attenuation (dB) for the send MF tone power level. Adjusting value is 0 to 15 dB in one dB steps.	3 dB
25	Ring duration detection time	Selects the minimum ring detection time Adjusting time is 100 MS to 990 MS in 10 MS steps. 10 to 99 selectable. For example: (120 ms) 12 x 10 ms = 120 ms	12
26	CML timing	Selects the time from end of ring to CML-ON. Adjusting time is 100 MS to 1900 MS in 100 MS steps. 0 to 19 selectable. For example: (300 ms) 03 x 100 ms = 300 ms	03

27	Strobe for LED head	Setting of LED print head strobe signals (00000-11111). Selection of strobe width in LED head. "00000" is darkest and "11111" is lightest. This setting should be verified upon initial install of machine, or replacement of main control board or LED Head. **Note 1:** When the rank marking of the new replaced LED print head (new part) is same as that of the old used LED print head (old part), you do not always have to set the LED print head strobe signal. **Note 2:** Intensity ranking is determined by the 1st, 2nd and 3rd digits from the right on the LED print head serial number. (i.e.: 212, 212 is the intensity ranking.)	10100

Setting of Technical Function No. 27

Setting / Rank Marking	MSB ↑ LSB																													
		0	0	0	0	0	0	0	0	0	0	0	0	0	0	0	1	1	1	1	1	1	1	1	1	1	1	1	1	1
		0	0	0	0	0	0	0	0	1	1	1	1	1	1	1	0	0	0	0	0	0	0	0	1	1	1	1	1	1	1
		0	0	0	0	1	1	1	1	0	0	0	0	0	1	1	1	0	0	0	0	1	1	1	1	0	0	0	0	1	1	1	1
		0	0	1	1	0	0	1	1	0	0	1	1	0	0	1	1	0	0	1	1	0	0	1	1	0	0	1	1	0	0	1	1
		0	1	0	1	0	1	0	1	0	1	0	1	0	1	0	1	0	1	0	1	0	1	0	1	0	1	0	1	0	1	0	1
291–313										*																					
269–290											*																				
248–268												*																			
229–247													*																		
212–228														*																	
196–211															*																
181–195																*															
168–180																	*														
155–167																		*													
143–154																			*												
132–142																				*											
122–131																					*										
113–121																						*									
105–112																							*								
100–104																								*							

T.F. No.	Item	Specifications	Default
28	Head width	Head width (later) You should confirm the head width by the following table, and then select it by this setting. (Refer to 4.2.1) Head width is two types (TYPE1/TYPE2). Setting / Head width / Head label: TYPE 1 — 208 mm (8.19 inches) — 1115G2 TYPE 2 — 216 mm (8.50 inches) — A4 200	TYPE 2
29	Media type	This setting can effect minor changes in fusing temperatures to compensate for different paper weights. Selects the recording paper according to its quality. Medium, Medium-heavy and Heavy selectable.	MEDIUM
30	Not used		

31	Symbol rate	Symbol rate (later) Selects the V.34 modem symbol rate for OKIFAX 5600. 2400, 2800, 3200, 3429 selectable.	2800

Copyright 1997, Okidata, Division of OKI America, Inc. All rights reserved. See the OKIDATA Business Partner Exchange (BPX) for any updates to this material. (http://bpx.okidata.com)

TAD: Telephone Answering Device

TAD can be connected to external telephone terminal to record your messages.

TAD records your speech and switches an automatic voice message response to the calling station.

Note 1: A choice of TAD mode is available by Technical Function No. 07.

Note 2: The predetermined time is selectable between 20 or 35 sec.

Note 3: Choice of message sending level. The level is selectable from 0 to 15 dB in one dB step. (Technical function No. 23)

TAD Mode Flowchart (Type 1)

Even though the fax does not detect CNG signal, the fax will go to receiving mode

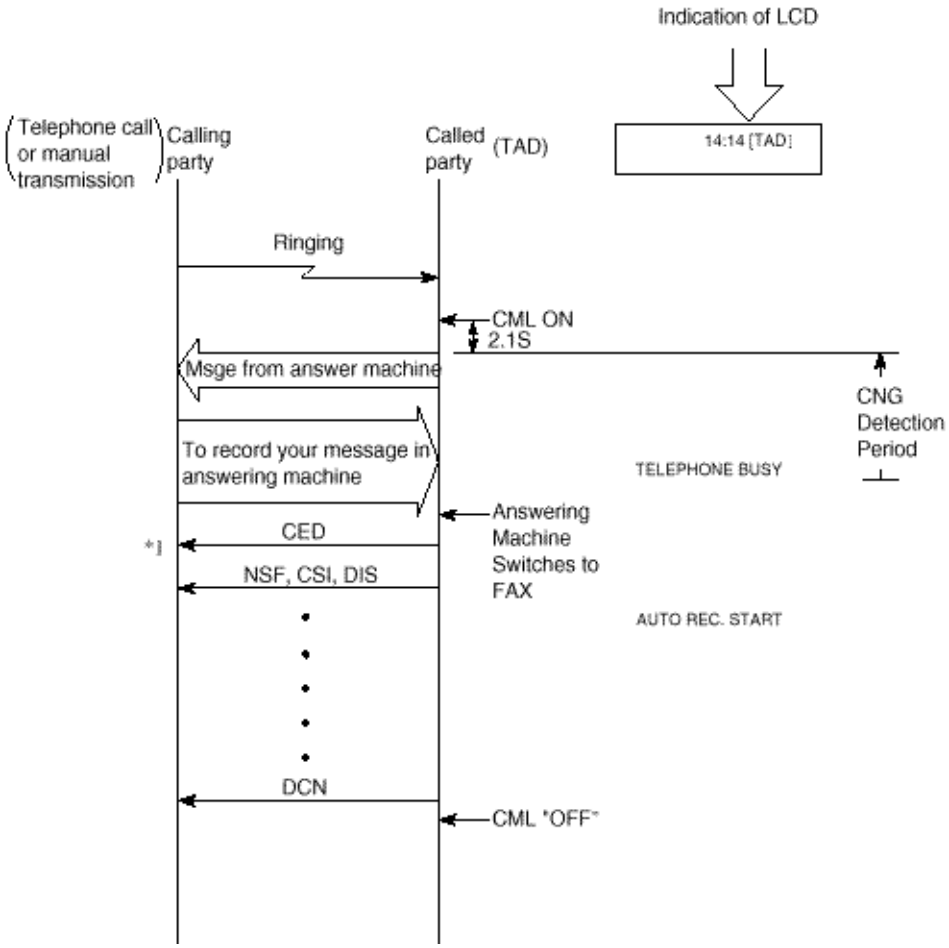

*1 To enable the manual TX mode.

Load document ---> Press START button ---> Manual transmission

NOTE:
If REMOTE RX Function is set to a value other than OFF, that code can be used to force FAX RX during TAD Mode Operation.

TAD Mode Flowchart (Type 2)

If the fax does not detect CNG signal during working of TAD, the machine will go to standby mode.

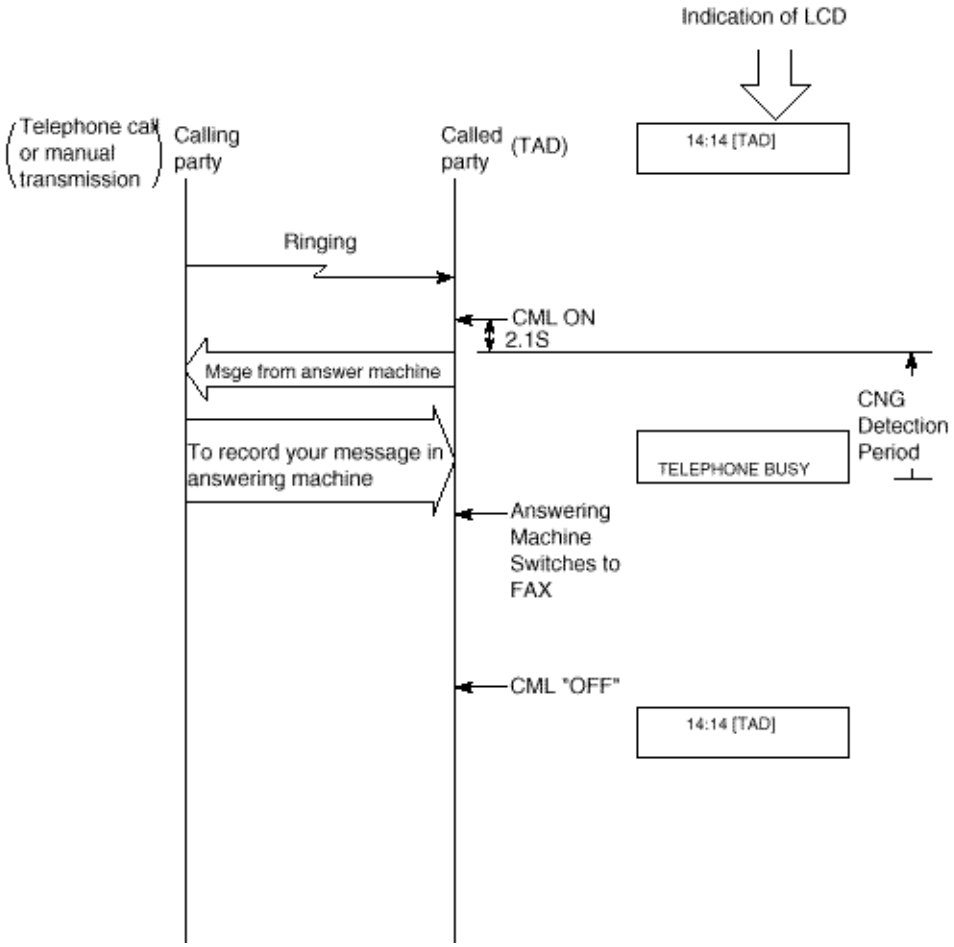

NOTE:
If REMOTE RX Function is set to a value other than OFF, that code can be used to force FAX RX during TAD Mode Operation.

Copyright 1997, Okidata, Division of OKI America, Inc. All rights reserved. See the OKIDATA Business Partner Exchange (BPX) for any updates to this material. (http://bpx.okidata.com)

This function is used for the purpose of TEL/FAX automatic switching as discussed below.

It assumes that an optional handset is connected to the machine.

(1) If the machine detects a call with a CNG signal indicating an auto send facsimile call, it starts an automatic document receiving operation.

(2) If machine detects a call without a CNG signal, machine generates the buzzer sounds as a telephone call. The calling person can hear a "ring back" tone within a predetermined time.

If the operator at the called side does not lift the handset within the predetermined time, the machine automatically starts a document receiving operation. Voice conversation will automatically be available through the internal handset by lifting up the handset while the call buzzer is sounding.

Note: In this mode, following four settings are required.

1: The predetermined time is selectable between 20 or 35 sec. (Function program No. 10)

2: No ringing signal is sent to the external telephone handset.

TEL/FAX Mode Flowchart

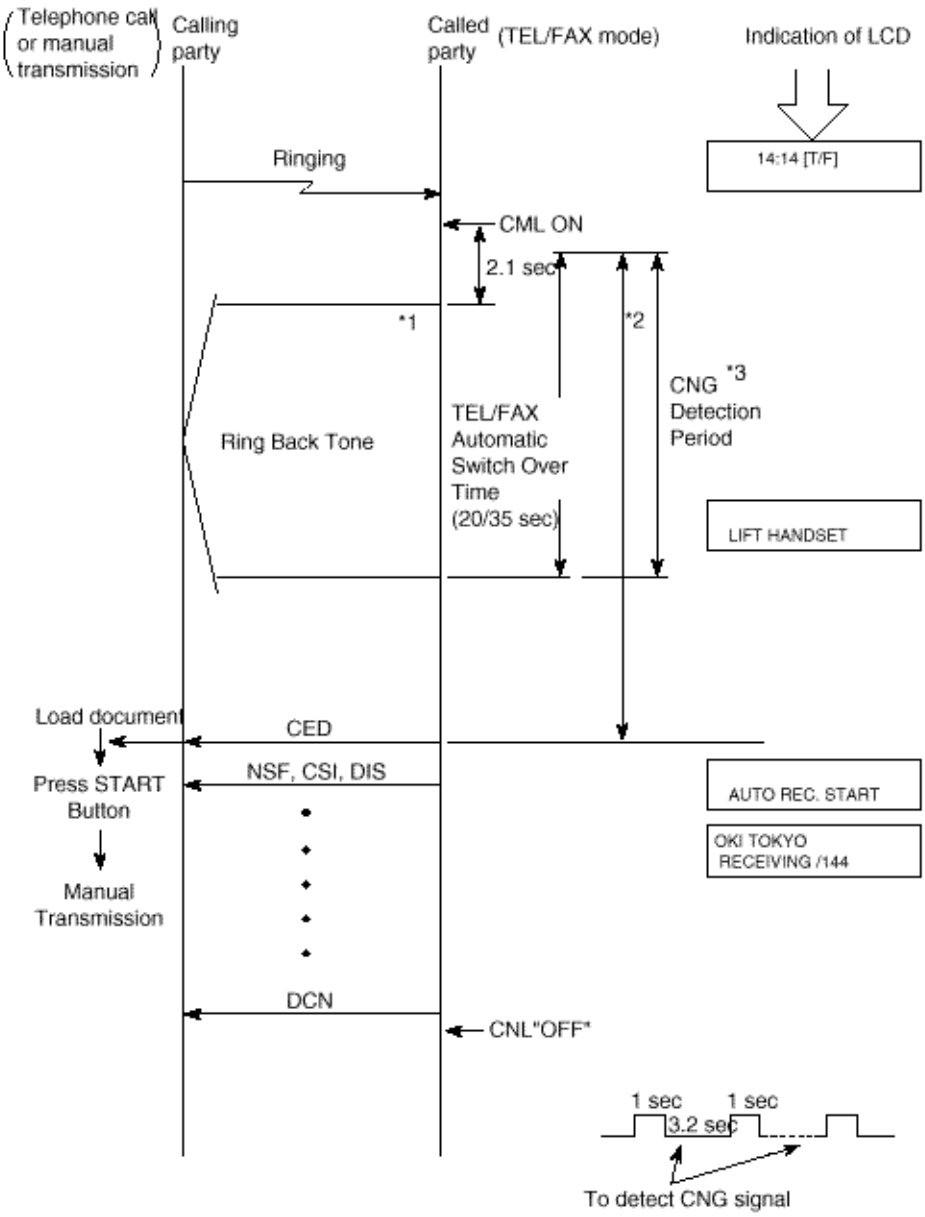

Copyright 1997, Okidata, Division of OKI America, Inc. All rights reserved. See the OKIDATA Business Partner Exchange (BPX) for any updates to this material. (http://bpx.okidata.com)

Note: The fonts displayed on the LCD operation panel may differ from the fonts written this manual.

Setting the Service Bit

1) Purpose

To enable or disable the following functions:

- Drum and toner counter display (clear)
- Service default report printing
- Protocol dump report printing
- Ring response time setting
- Dial parameters setting
- Printer counters clearing

2) Procedure

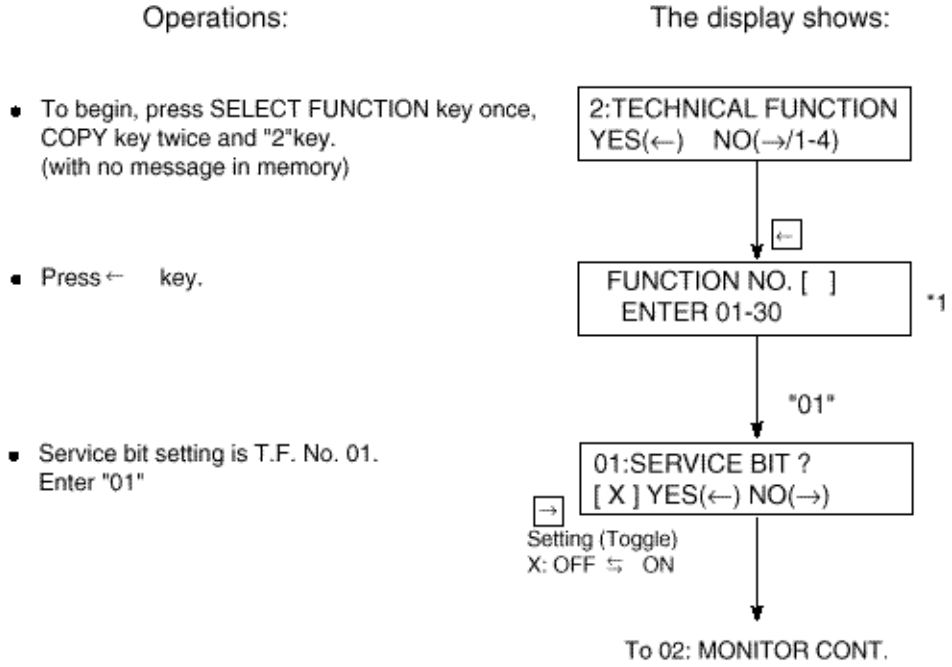

*1: 01-29 for OKIFAX 5300
01-30 for OKIFAX 5600

Refer to "Accessing the Technical Functions" below in this section for the general operation flow.

Accessing the Technical Functions

Operations:

The display shows:

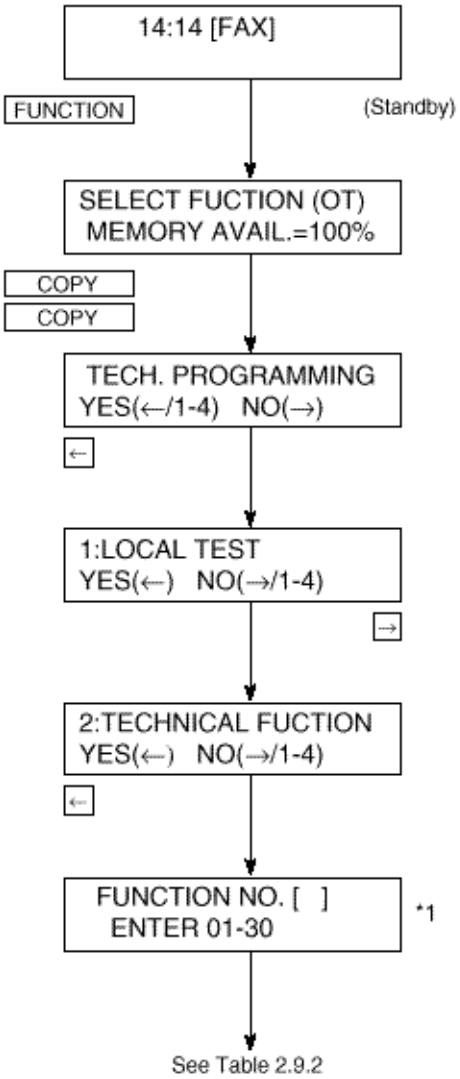

- Press SELECT FUNCTION key.
- Press COPY key twice.
- Press ← key.
- Press → key.
- Press ← key.
- Enter two-digit function number, then the display will show the set item corresponding to the number entered. If you want to set up all or several items starting with 01, then enter 01.

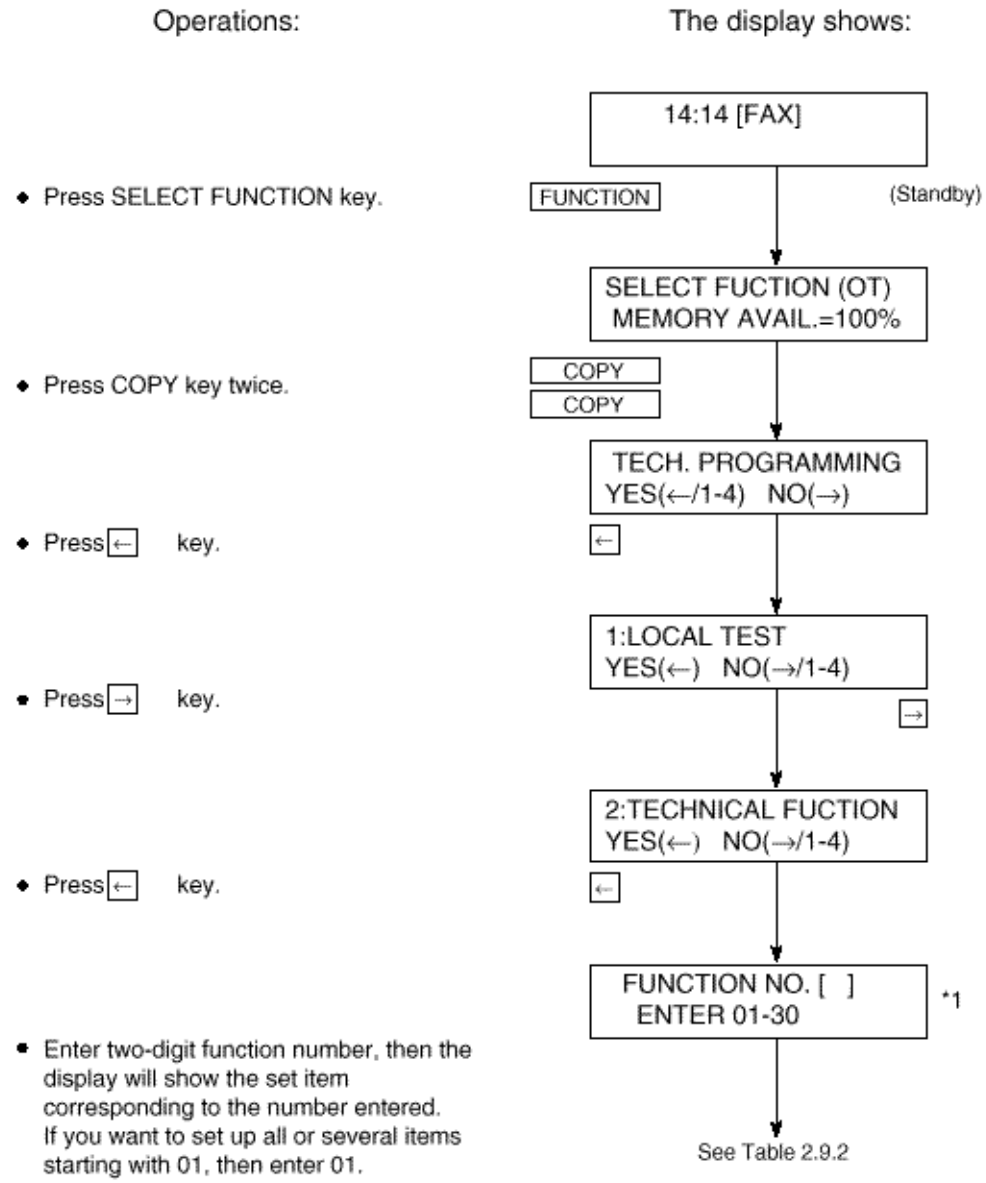

*1: 01-29 for OKIFAX 5300
01-30 for OKIFAX 5600

Copyright 1997, Okidata, Division of OKI America, Inc. All rights reserved. See the OKIDATA Business Partner Exchange (BPX) for any updates to this material. (http://bpx.okidata.com)

T.F. No.	Name of Function	The Display Shows
01	Service bit	01:SERVICE BIT [X] YES(←) NO(→) → Setting (Toggle) X: OFF ⇆ ON
02	Line monitor control	02:MONITOR CONT. [X] YES(←) NO(→) → Setting (Toggle) X: OFF ⇆ ON
03	Country code	03:COUNTRY CODE [X] YES(←) NO(→) → Setting X: INTL→ GBR → •••••USA
04	Time and date print	04:TIME/DATE PRINT [X] YES(←) NO(→) → Setting X: OFF → ONCE → → ALL
05	TSI print	05:TSI PRINT [X] YES(←) NO(→) → Setting (Toggle) X: OFF ⇆ ON
06	No toner memory reception	06:NO TONER MEM. RX [X] YES(←) NO(→) → Setting (Toggle) X: OFF ⇆ ON
07	TAD mode (For external telephone answering device.)	07:TAD MODE [X] YES(←) NO(→) → Setting X: OFF → TYPE1 → → TYPE2
08	Real-time dialling	08:REAL TIME DIAL [X] YES(←) NO(→) → Setting X: OFF → TYPE1 → → TYPE2
09	TEL/FAX switching	09:TEL/FAX SWITCH [X] YES(←) NO(→) → Setting (Toggle) X: OFF ⇆ ON
10	MDY/DMY format	10:MDY/DMY [X] YES(←) NO(→) → Setting (Toggle) X: MDY ⇆ DMY
11	Long document transmission	11:LONG DOC. SCAN [X] YES(←) NO(→) → Setting (Toggle) X: OFF ⇆ ON

Copyright 1997, Okidata, Division of OKI America, Inc. All rights reserved. See the OKIDATA Business Partner Exchange (BPX) for any updates to this material. (http://bpx.okidata.com)

T.F. No.	Name of Function	The Display Shows
12	Tone for echo (echo protection)	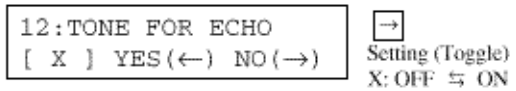
13	MH only	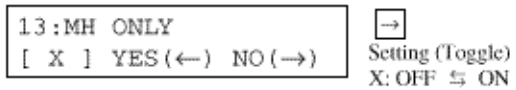
14	High-speed modem rate	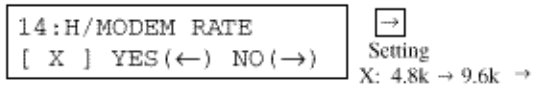
15	T1 (TX), timeout value (XTTO value)	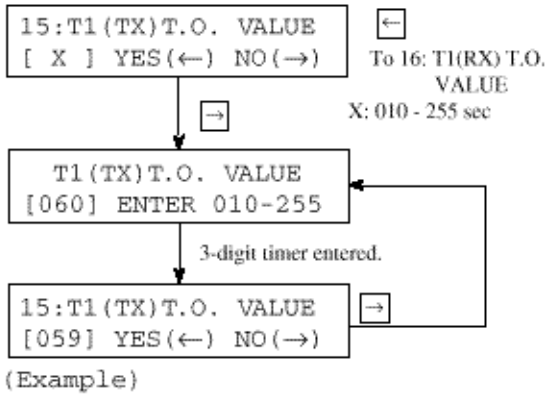
16	T1 (RX), timeout value	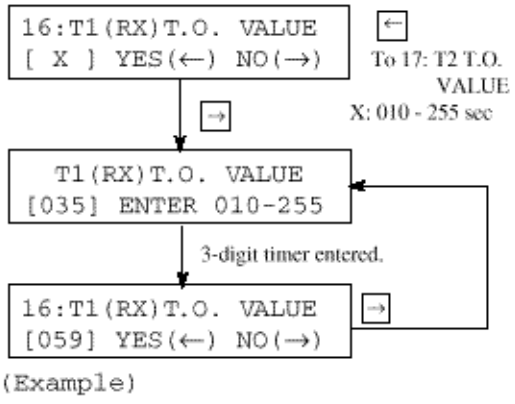

Copyright 1997, Okidata, Division of OKI America, Inc. All rights reserved. See the OKIDATA Business Partner Exchange (BPX) for any updates to this material. (http://bpx.okidata.com)

T.F. No.	Name of Function	The Display Shows
17	T2, timeout value	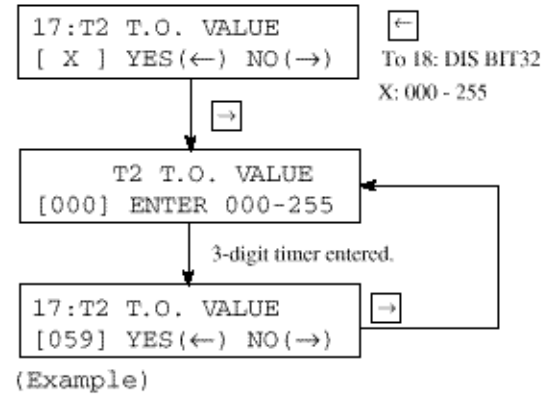
18	DIS bit 32	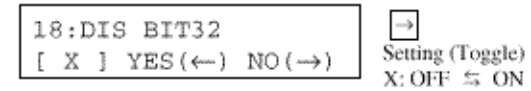
19	Error criterion	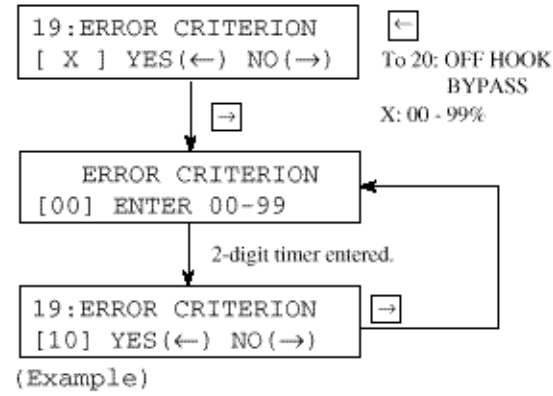
20	Off-hook bypass	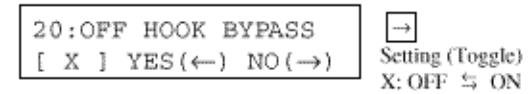
21	NL equalizer	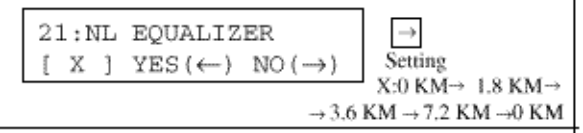
22	Modem attenuator	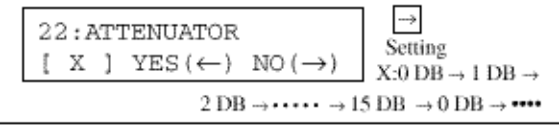
23	T/F tone attenuator (for TEL/FAX switch)	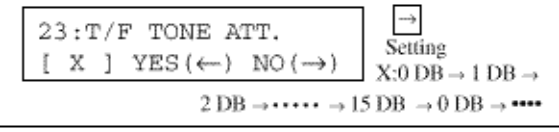

Copyright 1997, Okidata, Division of OKI America, Inc. All rights reserved. See the OKIDATA Business

Partner Exchange (BPX) for any updates to this material. (http://bpx.okidata.com)

T.F. No.	Name of Function	The Display Shows
24	MF attenuator	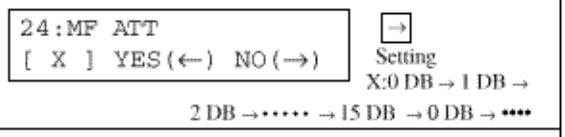
25	Ring duration detection time	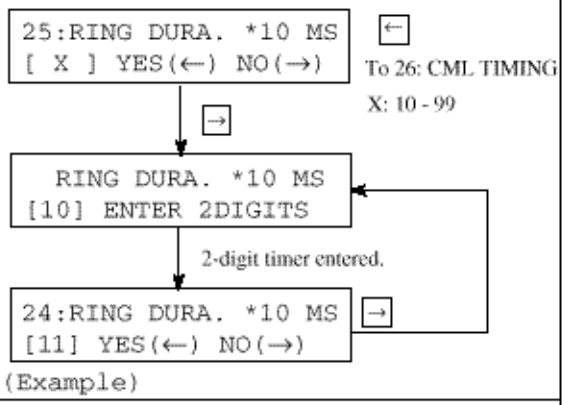
26	CML timing	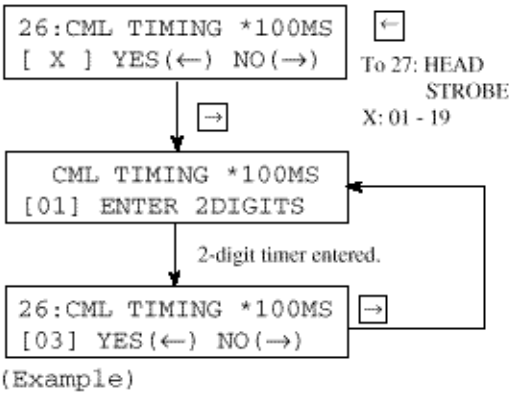
27	Head strobe	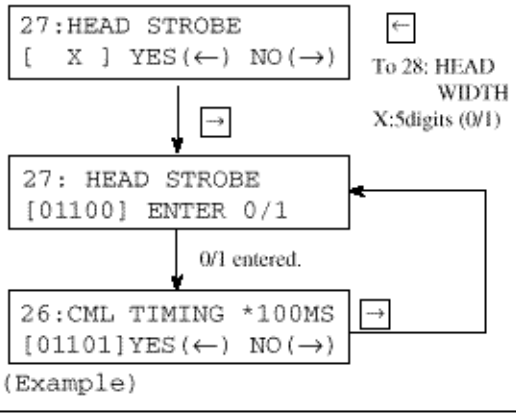

Copyright 1997, Okidata, Division of OKI America, Inc. All rights reserved. See the OKIDATA Business Partner Exchange (BPX) for any updates to this material. (http://bpx.okidata.com)

T.F. No.	Name of Function	The Display Shows
28	Head Width	28:HEAD WIDTH ? [X] YES(←) NO(→) → Setting (Toggle) X: TYPE1 ⇆ TYPE2
29	Media type	29:MEDIA TYPE [X] YES(←) NO(→) → Setting X: M → MH → H
30	Transfer roller clatch current	30:TR LATCH CURRENT [X] YES(←) NO(→) → Setting X:–1 → 0 → +1 → +2
31	Symbol rate (for OKIFAX 5600)	31:SYMBOL RATE ? [X] YES(←) NO(→) → Setting X:3429 → 2400 → 2800 → 3200 → 3429

Copyright 1997, Okidata, Division of OKI America, Inc. All rights reserved. See the OKIDATA Business Partner Exchange (BPX) for any updates to this material. (http://bpx.okidata.com)

This section explains the items usually set up by general users.

Table 2.9.3 shows the initial setting items and their purposes.

Each function program setting (FP) can be accessed by entering the corresponding function number on Function Programming.

The detailed procedure of the initial setting items will be explained on the following pages.

Note:
S-ON: Effective if the service bit has been set on.
FP: Function program setting
TF: Technical function setting

Copyright 1997, Okidata, Division of OKI America, Inc. All rights reserved. See the OKIDATA Business Partner Exchange (BPX) for any updates to this material. (http://bpx.okidata.com)

Note:
S-ON: Effective if the service bit has been set on.
FP: Function program setting
TF: Technical function setting

No.	Item	Specifications
01	Auto dial 1) One-touch dial	1) One-touch dial 15 one-touch keys are provided. (OKIFAX 5300) 30 one-touch keys are provided. (OKIFAX 5600) Max. 32 digits for each location number. In addition to an ordinary location number, another alternate location number can be registered in to each one-touch key. Purposes of this alternate location number: 1) Fax dial A fax number is registered as an alternate location number. When a call to the first location number is not answered, the alternate location number will be automatically dialed. 64 different codes are provided. (OKIFAX 5300) 99 different codes are provided. (OKIFAX 5600) * Two- digit location code: 01 to 64 (OKIFAX 5300) 01 to 99 (OKIFAX 5600) Max. 32 digits for each location number.
	2) Two-digit dial	15 one-touch keys are provided. (OKIFAX 5300) 30 one-touch keys are provided. (OKIFAX 5600) Max. 32 digits for each location number.
	3) Keypad dial	With ten-key pad. Max. 40 digits for one operation
	4) Chain dial	The number of dialing digits can be expanded by chaining any combination of items 1), 2) and 3).
	5) Mixed dial	Type of dialing can be changed from pulse dial to tone dial halfway in dialing process. The changing point is specified by using the * key.
02	Manual dial	With the optional telephone handset.

03	Receive mode 1) Auto receive mode 2) Manual receive mode 3) Telephone/fax automatic switchover	Automatic redial Selectable by key operation. Selectable by key operation. Selectable by key operation. The fax recognizes a fax call from a verbal call as follows: If the fax detects a call with a CNG signal, it starts an automatic document receive operation. If it detects a call without a CNG signal, it sounds the buzzer to indicate a voice call. Operator can answer the call by lifting the telephone handset. If he or she does not lift the handset within predetermined time (20 sec. or 35 sec.), the fax automatically starts a document receive operation. * FP + 10 (To determine the timer.) **Note:** Refer to "Tel/Fax Mode Flowchart" in this section.
04	Automatic redial	PTT parameter setting disables or enables this feature, and specifies redial times and redial intervals.
05	Last No. redial	● "REDIAL" key is provided. There is no limit on number of repeat attempts.
06	Group dial	● 10 dialing groups (OKIFAX 5300) Max. 79 locations. ● 20 dialing groups (OKIFAX 5600) Max. 129 locations. Grouping some one-touch keys and some two-digit auto dial codes to which telephone numbers have been assigned. This group setting makes broadcast operation simple.
07	Telephone directory and Location ID (Alpha Search)	In addition to fax numbers, an alpha/ numeric name can be assigned to each of one-touch keys and two-digit dial codes, 01 to 64 for OKIFAX 5300 and 01 to 99 for OKIFAX 5600. This name is called a location ID. Any location ID can be searched and displayed on LCD. Then direct dialing to the ID's station can be performed. There are two methods of searching: (1) Search based on the first character specified. (2) Searching by displaying all registered location IDs one after another in the lexicographical order. Location ID: Max. 15 characters

08	Voice request	A voice request from the transmitter is available only upon completion of the total message transmission. A voice request from the receiver is available at the end of each page being received.
09	Local copy	Printing resolution: Horizontal: 8 PEL/mm Horizontal: 300 dpi Vertical: 7.7 or 15.4 line/mm or variable
10	Multiple local copy	Up to 99 copies OKIFAX 5000 series.
11	Manual loading feeder	One single sheet from the feeder above the first recording paper cassette can be copied. Example of sheets: Transparency for an overhead projector
12	Broadcast (Memory transmission)	Maximum 84 (OKIFAX 5300) and Maximum 134 (OKIFAX 5600) remote locations can be specified by the following means: ● One-touch keys (with of without a group list). ● Two-digit auto dial codes. ● 5 keypad dial number One delayed time of calling for this feature can be specified unless any other delayed calling feature has been specified. 5 delayed broadcasts for OKIFAX 5300, 20 delayed broadcasts for OKIFAX 5600, and one immediate calling of broadcast is possible. For example, using an OKIFAX 5300 (5 specified times): 2 specified time of delayed broadcast and 3 specified time of delayed transmission. When multiple locations are specified for one broadcast (1) The unit prints a broadcast entry report, if specified in operating sequence. (2) The unit can print a broadcast confirmation report. (FP + 02 to enable or disable this printout)
13	Delayed transmission from the memory	The fax can automatically transmit documents at five specified times from the memory. Can be programmed up to three days in advance.
14	Polling transmission (To be polled)	Document(s) placed on the feeder can be collected by a remote station.
15	Polling reception	The fax can collect documents from one remote station.
16	Transmission preparation (Hopper)	An operator can prepare documents for transmission even while the fax is engaged in message reception. They will be automatically transmitted upon completion of the reception. An operator can also prepare documents for transmission during transmission from memory.

17	No toner reception	The fax can temporarily store received messages in memory when toner has run out. The messages are printed when toner has been newly supplied or an operator presses the SELECT FUNCTION key followed by the one-touch key No. 10 under the LCD message "MSG. IN MEMORY/REPLACE TONER CART." in the standby mode. * TF + 06 (To enable or disable this function)
18	Smooth printing	The documents received in the STD mode can be printed at the FINE resolution by means of generating one line based on the two consecutive original lines and printing it between them.
19	Dual Access	The documents for transmission can be read into the memory even while the fax is engaged in another memory transmission, reception in the ECM or non-ECM mode. 1) Operation of memory transmission while the fax is engaged in a communication (memory TX, memory RX or print mode RX). 2) Copy while the fax is engaged in a communication (memory TX or memory RX). **Note:** Condition for operation a) Copy is invalid when the machine is already engaged in an operation which is using or could use the printer. 3) Call reception while the fax is engaged in scanning documents for memory transmission when the auto receive mode is in "FAX" or "T/F" mode, although "TEL" mode is not valid. Refer to sub-section 2.9.7 for dual access operation. For the patterns of dual access refer to the following, Dual Access Combination Table (chart 1 of 2. For Dual Access Combination Table (chart 2 of 2).

Copyright 1997, Okidata, Division of OKI America, Inc. All rights reserved. See the OKIDATA Business Partner Exchange (BPX) for any updates to this material. (http://bpx.okidata.com)

Machine Status / Dual Access		Pro-gram-ming	TX from Feeder		Scanning to Memory		TX from Memory			RX (non-ECM/ECM)				
										Paper		Memory		
			During Scan-ning	After Scan-ning	During Pre-feeding	During Scan-ning	During Dialing	During Hand-shaking	During Trans-mitting Message	During Hand-shaking	During Receiving Message	During Hand-shaking (~1st C)	During Hand-shaking (~1st C)	During Receiving Message
Programming		\	N/A	N/A	N/A	N/A	N/A	N/A	N/A	N/A	N/A	N/A	N/A	N/A
TX from Feeder	Setting	N/A	\	X	\	\	X	X	X	X	X	X	X	X
	Dial & TX	N/A	\	\	\	\	\	\	\	\	\	\	\	\
Polling RX	Setting	N/A	N/A	N/A	N/A	N/A	N/A	N/A	N/A	N/A	N/A	N/A	N/A	N/A
	Dial & RX	N/A	\	\	N/A	N/A	\	\	\	\	\	\	\	\
Scanning to Memory		N/A	\	X	\	\	X	X	X	X	X	X	X	X
TX from Memory		N/A	\	\	N/A	N/A	\	\	\	\	\	\	\	\
Auto Answer	RX to Paper	N/A	\	\	X	X	\	\	\	\	\	\	\	\
	RX to Memory	N/A	\	\	X	X	\	\	\	\	\	\	\	\
	Poll TX	N/A	\	\	\	\	\	\	\	\	\	\	\	\
Manual Answer	RX to Paper	N/A	\	\	N/A	N/A	\	\	\	\	\	\	\	\
	RX to Memory	N/A	\	\	N/A	N/A	\	\	\	\	\	\	\	\
	Poll TX	N/A	\	\	N/A	N/A	\	\	\	\	\	\	\	\
Copy	Page by Page	N/A	\	N/A	\	\	N/A	N/A	N/A	N/A	N/A	X	X	X
Manual Message Print	Auto	N/A	N/A	N/A	X	X	X	X	X	\	\	X	X	X
	Manual	N/A	N/A	N/A	N/A	N/A	N/A	N/A	N/A	\	\	N/A	N/A	N/A
Manual Report Print	Auto	N/A	N/A	N/A	X	X	X	X	X	\	\	X	X	X
	Manual	N/A	N/A	N/A	N/A	N/A	N/A	N/A	N/A	\	\	N/A	N/A	N/A

<Note> x: Available N/A: Not available \: Available with limitation

Copyright 1997, Okidata, Division of OKI America, Inc. All rights reserved. See the OKIDATA Business Partner Exchange (BPX) for any updates to this material. (http://bpx.okidata.com)

Machine Status / Dual Access		Copy			Memory Reception Print				Report Printing			
		Page by Page	Multi-Sorting		Auto Matic		Manual		Auto Matic		Manual	
			During Scanning	During Printing	During Hopping	During Printing	During Hopping	During Printing	During Hopping	During Printing	During Hopping	During Printing
Programming		N/A	N/A	N/A	N/A	N/A	N/A	N/A	N/A	N/A	N/A	N/A
TX from Feeder	Setting	\	\	\	X	X	N/A	N/A	X	X	N/A	N/A
	Dial & TX	\	\	\	X	X	N/A	N/A	X	X	N/A	N/A
Polling RX	Setting	N/A	N/A	N/A	N/A	N/A	N/A	N/A	N/A	N/A	N/A	N/A
	Dial & RX	N/A	N/A	N/A	N/A	N/A	N/A	N/A	N/A	N/A	N/A	N/A
Scanning to Memory		\	\	\	X	X	N/A	N/A	X	X	N/A	N/A
TX from Memory		N/A	N/A	N/A	N/A	N/A	N/A	N/A	N/A	N/A	N/A	N/A
Auto Answer	RX to Paper	N/A	N/A	N/A	N/A	N/A	N/A	N/A	N/A	N/A	N/A	N/A
	RX to Memory	X	X	X	X	X	N/A	N/A	X	X	N/A	N/A
	Poll TX	N/A	N/A	N/A	N/A	N/A	N/A	N/A	N/A	N/A	N/A	N/A
Manual Answer	RX to Paper	N/A	N/A	N/A	N/A	N/A	N/A	N/A	N/A	N/A	N/A	N/A
	RX to Memory	N/A	N/A	N/A	N/A	N/A	N/A	N/A	N/A	N/A	N/A	N/A
	Poll TX	N/A	N/A	N/A	N/A	N/A	N/A	N/A	N/A	N/A	N/A	N/A
Copy	Page by Page	\	\	\	\	\	\	\	\	\	\	\
Manual Message Print	Auto	\	\	\	\	\	\	\	\	\	\	\
	Manual	\	\	\	\	\	\	\	\	\	\	\
Manual Report Print	Auto	\	\	\	\	\	\	\	\	\	\	\
	Manual	\	\	\	\	\	\	\	\	\	\	\

<Note> x: Available N/A: Not available \: Available with limitation

Copyright 1997, Okidata, Division of OKI America, Inc. All rights reserved. See the OKIDATA Business Partner Exchange (BPX) for any updates to this material. (http://bpx.okidata.com)

Flowchart

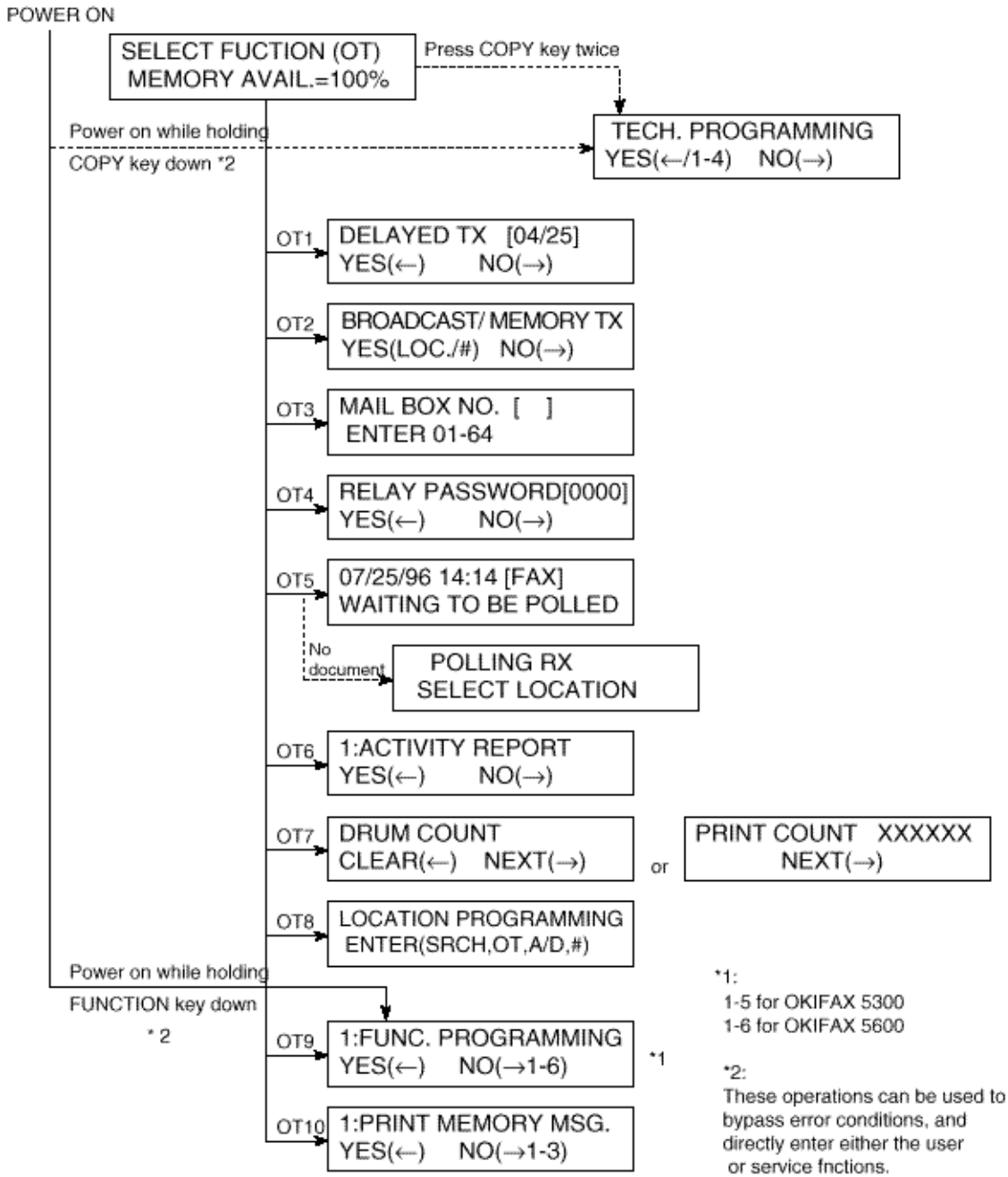
POWER ON
SELECT FUCTION (OT)
MEMORY AVAIL.=100%
Press COPY key twice
TECH. PROGRAMMING
YES(←/1-4) NO(→)
Power on while holding
COPY key down *2
OT1
DELAYED TX [04/25]
YES(←) NO(→)
OT2
BROADCAST/ MEMORY TX
YES(LOC./#) NO(→)
OT3
MAIL BOX NO. [ ]
ENTER 01-64
OT4
RELAY PASSWORD[0000]
YES(←) NO(→)
OT5
07/25/96 14:14 [FAX]
WAITING TO BE POLLED
No
document
POLLING RX
SELECT LOCATION
OT6
1:ACTIVITY REPORT
YES(←) NO(→)
OT7
DRUM COUNT
CLEAR(←) NEXT(→)
or
PRINT COUNT XXXXXX
NEXT(→)
OT8
LOCATION PROGRAMMING
ENTER(SRCH,OT,A/D,#)
Power on while holding
FUNCTION key down
* 2
OT9
1:FUNC. PROGRAMMING
YES(←) NO(→1-6)
*1
OT10
1:PRINT MEMORY MSG.
YES(←) NO(→1-3)
*1:
1-5 for OKIFAX 5300
1-6 for OKIFAX 5600
*2:
These operations can be used to bypass error conditions, and directly enter either the user or service fnctions.

Copyright 1997, Okidata, Division of OKI America, Inc. All rights reserved. See the OKIDATA Business Partner Exchange (BPX) for any updates to this material. (http://bpx.okidata.com)

F+OT Item	Specifications	No.
01	Delayed transmission (Tx)	This function enters a message transmission time(s) and location(s) for execution at a specified time.
02	Broadcast/memory transmission	To make a one-time selection of the memory transmission mode. Maximum 84 (OKIFAX 5300) Max. 134 (OKIFAX 5600) remote locations can be specified by the following means: ● One-touch key (with of without a group list) ● Two-digit auto dial code ● Keypad dial number When multiple locations are specified for one broadcast, 1) The fax can print a broadcast confirmation report, if specified in operating sequence.
03	Confidential transmission	To program the mail box number 01 to 64. Available remote station's mail box numbers: OKIFAX 2400/2600: 01 to 40 OKIFAX 1000: 01 to 16 OKIFAX 2300: 01 to 16 OKIFAX 2350/OKIFAX 1050: 01 to 08 OKIFAX 2450: 01 to 16 OKIFAX 5300: 01 to 08 OKIFAX 5600: 01 to 16
04	Relay broadcast initiate relay transmission	This function automatically originates a message call via relay key station (which must be equipped with OKIFAX 2600, or equivalent) up to 99 locations. To program relay password. To enable or disable the relay report.
05	Polling transmission/reception	Polling TX: The documents placed on the feeder can be collected by a remote station. Polling RX: The fax can collect documents from one remote station.

06	Report printing	1. Activity report 2. Broadcast message confirmation report (Multi location) 3. Phone directory report 4. Configuration report (Serviceman report if service bit sets to ON.) 5. Protocol dump report * TF + 01 (Sets to on Service bit) Log. report * TF + 01 (Sets to on Service bit)
07	Counter display (clear)	One-touch keys allow registering: (1) Telephone number (numeral, -, P and space) in 32 digits. (2) Alternate fax telephone number in 32 digits. (additional registration) (3) ID for the telephone directory function in 15 characters (alphabetic, numeric and symbolic). (One ID can be registered for one key). (4) 15 one-touch keys are provided (OKIFAX 5300). 30 one-touch keys are provided (OKIFAX 5600).
08	Location program 1. One-touch key	(1) Telephone number (numeral, -, P and space) in 32 digits. (2) Alternate fax telephone number in 32 digits. (additional registration) (3) ID for the telephone directory function in 15 characters (alphabetic, numeric and symbolic). (One ID can be registered for one key). (4) 15 one-touch keys are provided (OKIFAX 5300). 30 one-touch keys are provided (OKIFAX 5600).
	2. Two-digit auto dial program	Auto-dial No. 01 to 64 for OKIFAX 5300 and No. 01 to 99 for OKIFAX 5600 Allows registering telephone number in 32 digits (numeral, -, P and space) and ID for the telephone directory function 15 characters (alphabetic, numeric and symbolic).
	3. Group setting	Grouping some one-touch keys and some two-digit auto dial codes to which telephone numbers have been assigned. This group setting makes broadcast operation simple. 10 dialing groups for the OKIFAX 5300 20 dialing groups for OKIFAX 5600.

09	User's programs	
	1. Function program	Function program 01: MCF (SINGLE-LOC.) 02: MCF (MULTI-LOC.) 03: ERR. REPORT (MCF.) 04: IMAGE IN MCF. 05: SENDER ID 06: MONITOR VOLUME 07: BUZZER VOLUME 08: CLOSED NETWORK 09: TX MODE DEFAULT 10: T/F TIMER PRG. 11: RING RESPONSE 12: DISTINCTIVE RING 13: 1’ST PAPER SIZE 14: 2’ND PAPER SIZE 15: USER LANGUAGE 16: INCOMING RING 17: REMOTE RECEIVE 18: MEM./FEEDER SW 19: 20: ECM FUNCTION 21: REMOTE DIAGNOSIS 22: PC/FAX SWITCH 23: ONE TOUCH PARAM. Refer to Table 2.9.4 for Specification of the function programs No. 01 through 23
	2. Dial parameters	Dial parameters 1. REDIAL TRIES 2. REDIAL INTERVAL 3. DIAL TONE DETECT 4. BUSY TONE DETECT 5. MF (TONE)/DP (PULSE) 6. PULSE DIAL RATE 7. PULSE MAKE RATIO 8. PULSE DIAL TYPE 9. MF(TONE) DURATION 10. PBX LINE 11. FLASH/EARTH/NORMAL 12. AUTO START 13. DIAL PREFIX 14. Not Used Refer to Table 2.9.9 for specification of dial parameter settings.
	3. Clock adjustment	Date and time adjustment.
	4. System data program	(1) TSI/CSI Registration of TSI/CSI/CIG (numbers, + and space) in 20 digits. TSI: Transmitting Subscriber Identification CSI:Called Subscriber Identification CIG: Calling Subscriber Identification (2) SENDER ID Registration of sender ID (alphabetic, numeric and symbolic) in 32 digits. (3) CALL BACK NO. Registration of telephone number for cover letter (alphabetic,

10	Print operation 1. Substitutive message print	Used to print messages stored in memory during toner low condition. Also used to print messages received in memory when RX Mode is set to MEM RX. The messages are printed when toner has been newly supplied or an operator performs the substitutive operation. When memory reception data exists in the memory and the MEMORY RX MODE is indicated by AUTO REC key operation, the machine will print out the memory reception data.
	2. Confidential reception message print	Confidential RX message print Printing is enabled for received message in the personal box in memory only when the password entered by the operator matches that already registered to the box. ● 8 mailboxes for OKIFAX 5300 ● 16 mailboxes for OKIFAX 5600
	3. Printer cleaning	This drum cleaning function removes the residual toner on the image drum surface when print quality becomes questionable. This operation should be performed before any hardware replacements are considered.

Copyright 1997, Okidata, Division of OKI America, Inc. All rights reserved. See the OKIDATA Business Partner Exchange (BPX) for any updates to this material. (http://bpx.okidata.com)

User Function Program Settings (Table 2.9.4)

Part 1 of 4

P.F. No.	Item	Specifications	Default
01	Message confirmation report (Single location)	Enables or disables the automatic message confirmation report printing after a single location call. ON: Printing the MCF report. OFF: Disables this function.	OFF
02	Message confirmation report (Multiple locations)	Enables or disables the automatic message confirmation report printing after a multiple polling or broadcast. ON: Prints the MCF report. OFF: Disables this function.	ON
03	Error report (MCF)	Enables or disables the automatic error report printing when transmission error occurs. (Excepts for service bit "0".) ON: Printing the error report. OFF: Disables this function.	ON
04	Image in MCF	Enables or disables the automatic printing of the image on the first sheet below the message confirmation report. ON: Printing the image in MCF report. (Memory transmission only) OFF: Disables this function.	ON
05	Sender ID	The fax can transmit programmed alphanumeric message, such as company's name consisting of up to 32 characters. Enables or disables the sender ID function. * (Outside only) ON: Enables OFF: Disables	ON
06	Line monitor volume	Controls the volume. OFF/Low/High selectable.	LOW

07	Buzzer volume	Selects the sound volume of each buzzer (end of communication buzzer, voice request buzzer and off-hook alarm) and software ringer from high, low and middle levels. Low/Mid/High selectable. **Note:** Fixed a low level for key touch tone.	MID
08	Closed network	The fax compares lower four digits of TSI/CSI received from remote station with fax numbers registered locally for one-touch dial and two-digits autodial. If unmatched, the communication will be automatically disconnected. OFF/RX only/TX and RX selectable. * Prevention of direct mail or wrong number calls. (Reference) TSI: Transmitting subscriber identification CSI: Called subscriber identification	OFF
09	TX mode default	Selects automatically the mode set up when a document is loaded on the feeder. The following combinations are selectable. STD/NORMAL→STD/DARK→STD/LIGHT→ FINE/NORMAL→FINE/DARK→FINE/LIGHT→ EX.FINE/NORMAL→EX.FINE/DARK→ EX.FINE/LIGHT→PHOTO/NORMAL→ PHOTO/DARK→PHOTO/LIGHT→ STD/NORMAL→ • • •	STD / NORMAL
10	Telephone/fax automatic switchover time	Specifies the time for which the fax alerts an operator on reception of a call in the telephone/fax automatic swichover mode. 20 sec./35 sec. selectable Refer to the "Tel/Fax Mode Flowchart" in this section..	35 sec
11	Ring response time	User can register ring response time if National code is: INT'L, GBR, NOR, SWE, USA, HOL, ESP. ITA, GRE or GER Selects the ring response time. 1 ring/5/10/15/20 sec. selectable.	1 ring
12	Distinct ring	Specifies the detected distinct ring. OFF/ON/SET selectable.	OFF
13	1'st cassette paper size	Selects A4, LETTER or LEGAL 13˝, LEGAL 14˝/ OTHER (when installing Bi-Centro board) by this function. The operator must select the preferable paper size as the machine cannot detect the paper size automatically.	LETTER

14	2’nd cassette paper size (option)	Selects A4, LETTER or LEGAL 13˝, LEGAL 14˝/ OTHER (when installing Bi-Centro board) by this function. The operator must select the preferable paper size as the machine cannot detect the paper size automatically.	LETTER
15	User language	A choice of 2 languages for LCD and print message are available. ENG (English), SPANISH/FRENCH, PORTU-GUESE	ENG
16	Incoming ring	Instead of ringer circuit, software can control built-in speaker to ring sound. To enable (ON) or disable (OFF) or distinctive ring (DRC) a software generated ring sound to indicate arrival of an incoming bell.	ON
17	Remote receive	This function is used to transfer the call received by external telephone (connected to fax) by entering preset two-digits. This function is also used for TAD Mode. The following combinations are selectable. 00/11/22/33/44/55/66/77/88/99/**/##/OFF select-able.	OFF
18	Memory and feeder switch	Switches the transmission mode between the memory and feeder. MEM. TX/FEEDER TX selectable. **Note:** Memory or feeder setting can register as the default by operating the "F + OT 2".	FEEDER TX
19	Power save mode	The power save mode is automatic. It cannot be enabled or disabled by either the end user or the service technician.	N/A
20	ECM function	Enables or disables ECM (error correction mode) communication. ON: Enables OFF: Disables	ON
21	Remote diagnosis	Enables or disables the remote diagnosis func-tion when the machine can allow remote diagno-sis from remote center. ON: Enables OFF: Disables	OFF

22	PC/FAX switch	When the host side does not respond at the time of incoming call to PC, specifies whether to starts forcibly as fax reception or not. ON: Enables OFF: Disables Note: When the Bi-Centro board is installed on the fax, PC/FAX switching mode appears in the LCD display.	ON
23	One-touch key parameters	To assign the following features to each one-touch key. 1) Echo protection (ON/OFF)	OFF

Copyright 1997, Okidata, Division of OKI America, Inc. All rights reserved. See the OKIDATA Business Partner Exchange (BPX) for any updates to this material. (http://bpx.okidata.com)

1) Accessing the User's Functions

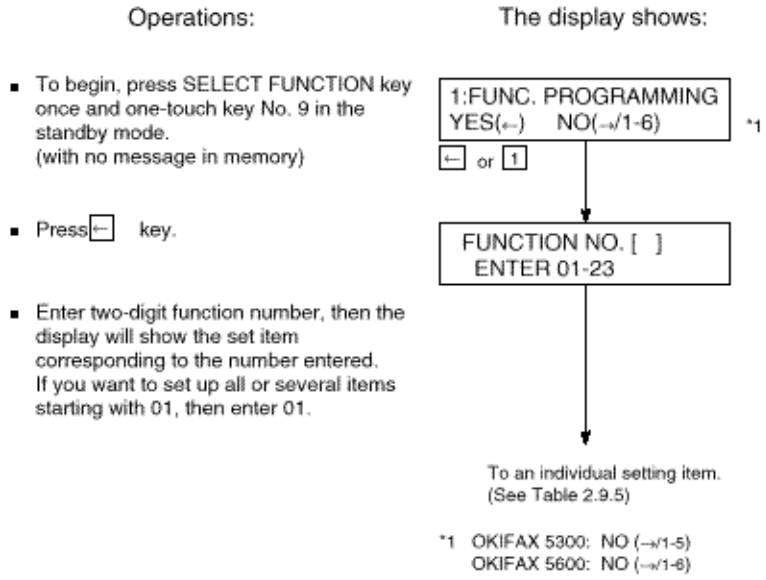

Copyright 1997, Okidata, Division of OKI America, Inc. All rights reserved. See the OKIDATA Business Partner Exchange (BPX) for any updates to this material. (http://bpx.okidata.com)

Tap No.	Name of Function	The Display Shows
0 1	Message confirmation report (Single location)	01:MCF(SINGLE-LOC.) [X] YES(←) NO(→) → Setting (Toggle) X: OFF ⇆ ON
0 2	Message confirmation report (Multiple locations)	02:MCF (MULTI-LOC.) [X] YES(←) NO(→) → Setting (Toggle) X: OFF ⇆ ON
0 3	Error report	03:ERR. REPORT(MCF.) [X] YES(←) NO(→) → Setting (Toggle) X: OFF ⇆ ON
0 4	Image in MCF.	04:IMAGE IN MCF. [X] YES(←) NO(→) → Setting (Toggle) X: OFF ⇆ ON
0 5	Sender ID	05:SENDER ID [X] YES(←) NO(→) → Setting (Toggle) X: OFF ⇆ ON
0 6	Line monitor volume	06:MONITOR VOLUME [X] YES(←) NO(→) → Setting X: OFF → LOW → HIGH
0 7	Buzzer volume	07:BUZZER VOLUME [X] YES(←) NO(→) → Setting (Toggle) X: MID → HIGH → LOW
0 8	Closed network	08:CLOSED NETWORK [X] YES(←) NO(→) → Setting X: T/R → RX → OFF
0 9	TX mode default	09:TX MODE DEFAULT YES(←) NO(→) → Setting RESOLUTION & ORIGINAL NOTE 1:
1 0	Telephone/fax automatic switchover timer	10:T/F TIMER PRG. [X] YES(←) NO(→) → Setting (Toggle) X: 20SEC ⇆ 35SEC
1 1	Ring response time	11:RING RESPONSE [X] YES(←) NO(→) → Setting NOTE 2: X: 1RING → 05SEC → 10SEC → 15SEC → 20SEC → 1RING
1 2	Distinct ring	12:DISTINCTIVE RING [X] YES(←) NO(→) → Setting (Toggle) X:OFF → ON → SET NOTE 2:

Tap No.	Name of Function	The Display Shows
1 3	1st cassette paper size	13:1'ST PAPER SIZE [X] YES(←) NO(→) → Setting X: A4 → ET → GL 13 → GL 14 → OTHER → A4
1 4	2ndcassette paper size (option for OKIFAX 5000 series)	14:2'ND PAPER SIZE [X] YES(←) NO(→) → Setting X: A4 → ET → GL 13 → GL 14 → OTHER → A4 NOTE 3:
1 5	User language	15:USER LANGUAGE [X] YES(←) NO(→) → Setting X: ENG. ⇆ (Other)
1 6	Incoming ring	16:INCOMING RING [X] YES(←) NO(→) → Setting (Toggle) X: OFF → ON → DRC → OFF
1 7	Remote receive	17:REMOTE RECEIVE [X] YES(←) NO(→) OFF → 11 → 22 → 33 → 44 → 55 → 77 → 88 → 99 → ## → ** → OFF
1 8	Memory and feeder selection	18:MEM/FEEDER SW. [X] YES(←) NO(→) → Setting X: MEM. ⇆ FEED.
1 9		
2 0	ECM function	20:ECM FUNCTION [X] YES(←) NO(→) → Setting (Toggle) X: OFF ⇆ ON
2 1	Remote diagnosis	21:REMOTE DIAGNOSIS [X] YES(←) NO(→) → Setting (Toggle) X: OFF ⇆ ON
2 2	PC/FAX switch	22:PC/FAX SWITCH [X] YES(←) NO(→) → Setting (Toggle) X: OFF ⇆ ON NOTE 4:
2 3	One-touch key parameters	23:ONE TOUCH PARAM. YES(OT) NO(→) → To: FUNCTION NO. One-touch key pressed. ECHO PROTECTION [X] YES(←) NO(→) → Setting (Toggle) X: OFF ⇆ ON ←

Note 1:
RESOLUTION & ORIGINAL of Tx mode default setting can be selected by using ---> key, while documents are loaded in the ADF.

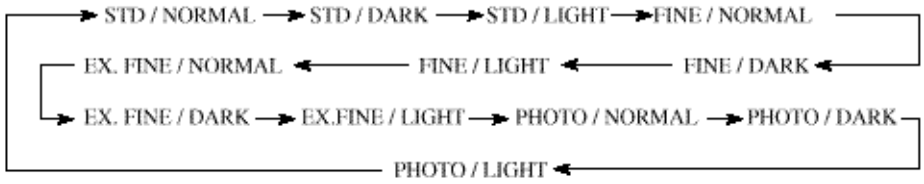

Note 2:

When 2'nd tray is not mounted, 2'nd paper size is bypassed as follows:

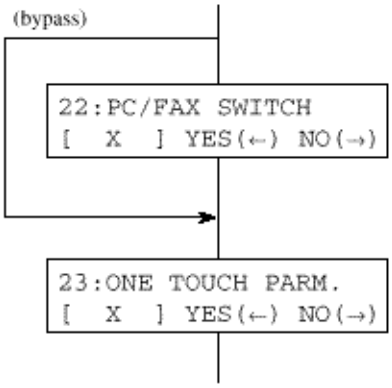

Note 3:

When CTR board is not mounted, PC/FAX switch is bypassed as follows:

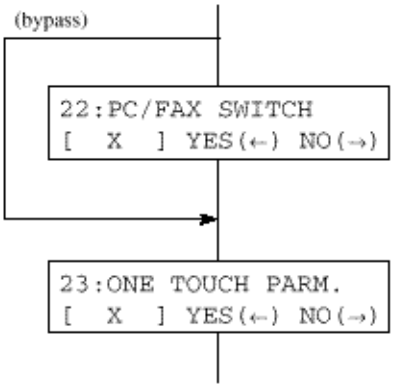

2) Ring response time

Before specifying the ring response time, set the service bit on following the operations shown in 2.9.3 (1). (Service Bit Setting).

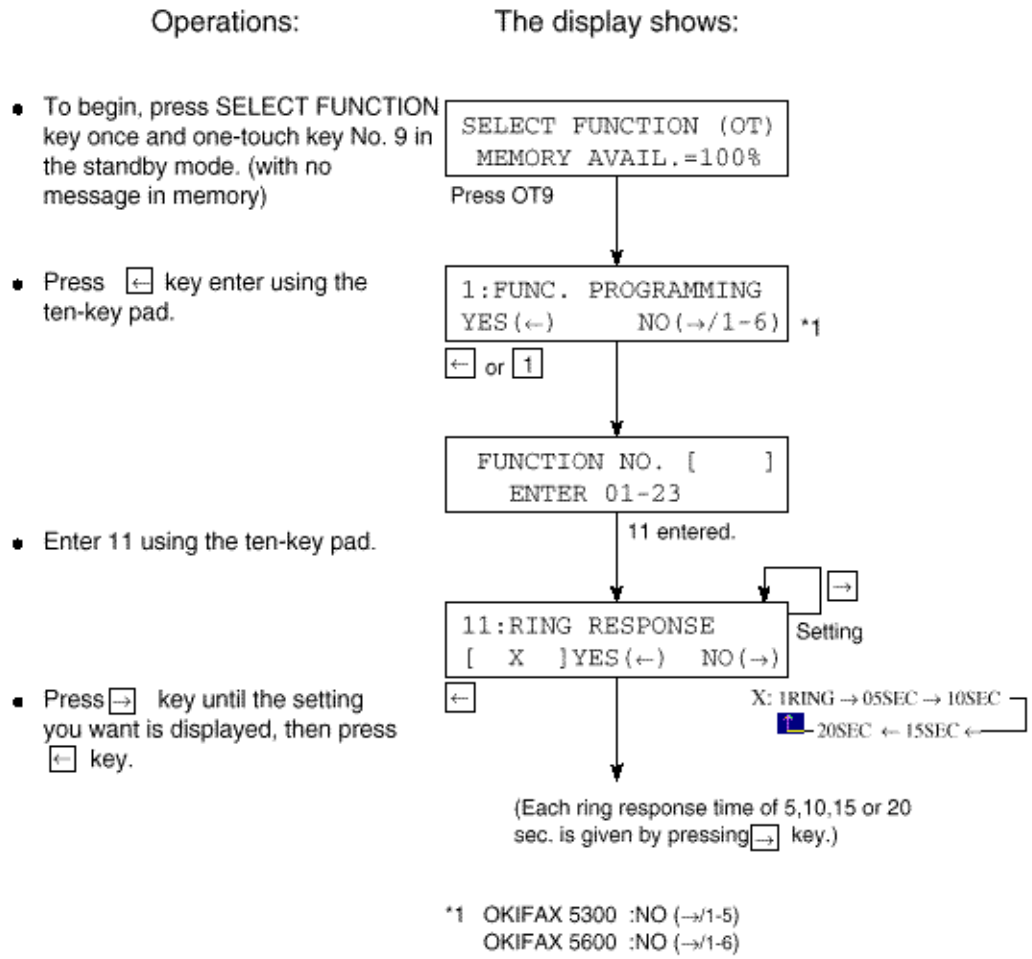

3) Dial parameters (Service Bit "OFF")

To get the "DIAL PARAMETER" message on the display, perform the same operation as Table 2.9.9. (Dial parameters settings).

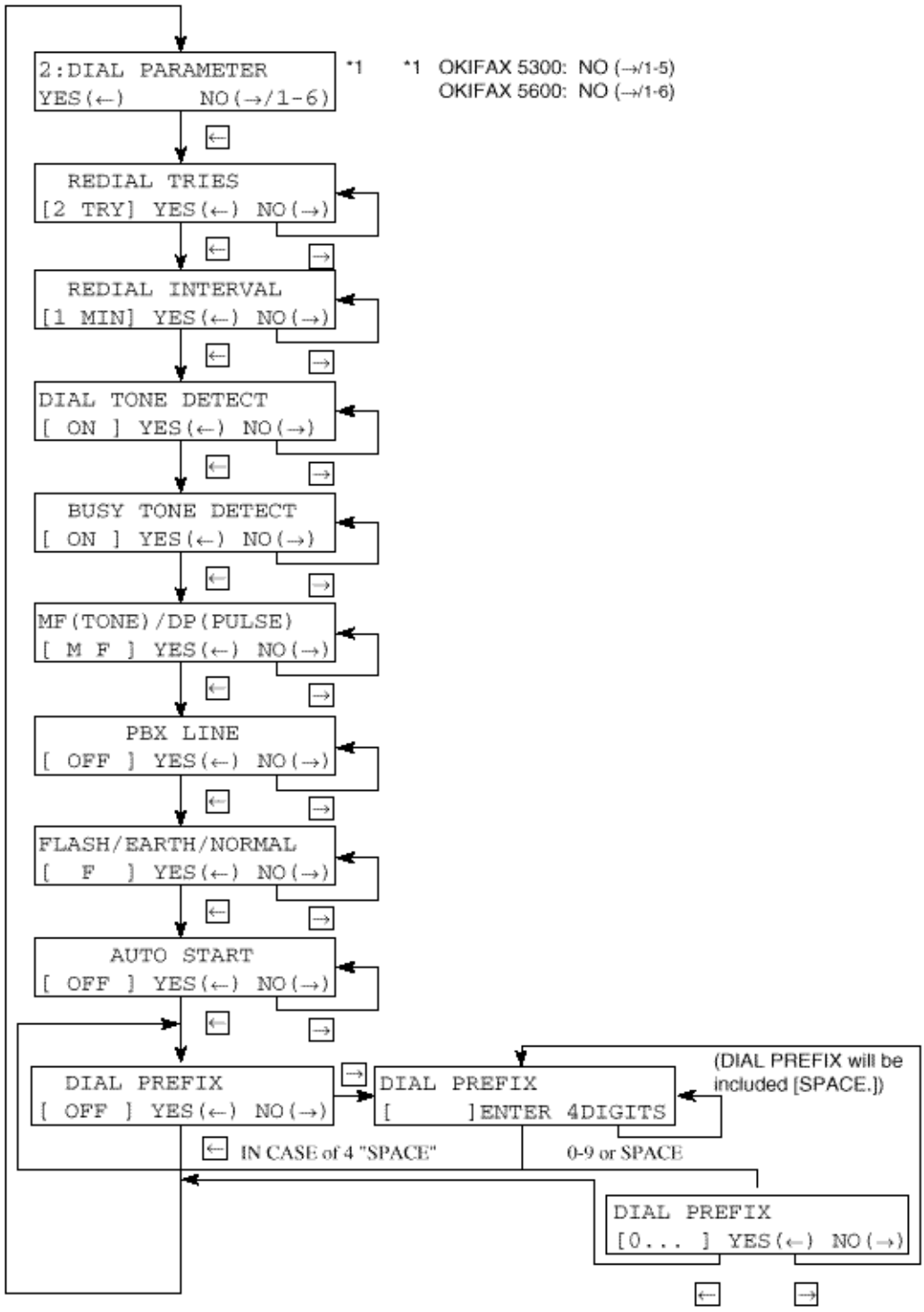

Copyright 1997, Okidata, Division of OKI America, Inc. All rights reserved. See the OKIDATA Business Partner Exchange (BPX) for any updates to this material. (http://bpx.okidata.com)

Operations:

- To begin, press SELECT FUNCTION key once and one-touch key No. 9 in the standby mode.
  (with no message in memory)
- Enter 3 using the ten-key pad.
- Press ← key.
- Enter date and time by using the ten-key pad (0 to 9 keys).

The display shows:

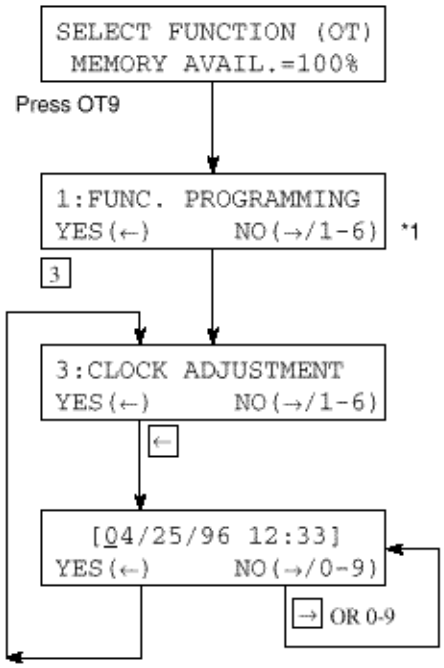

*1 OKIFAX 5300: NO (→/1-5)
OKIFAX 5600: NO (→/1-6)

Copyright 1997, Okidata, Division of OKI America, Inc. All rights reserved. See the OKIDATA Business Partner Exchange (BPX) for any updates to this material. (http://bpx.okidata.com)

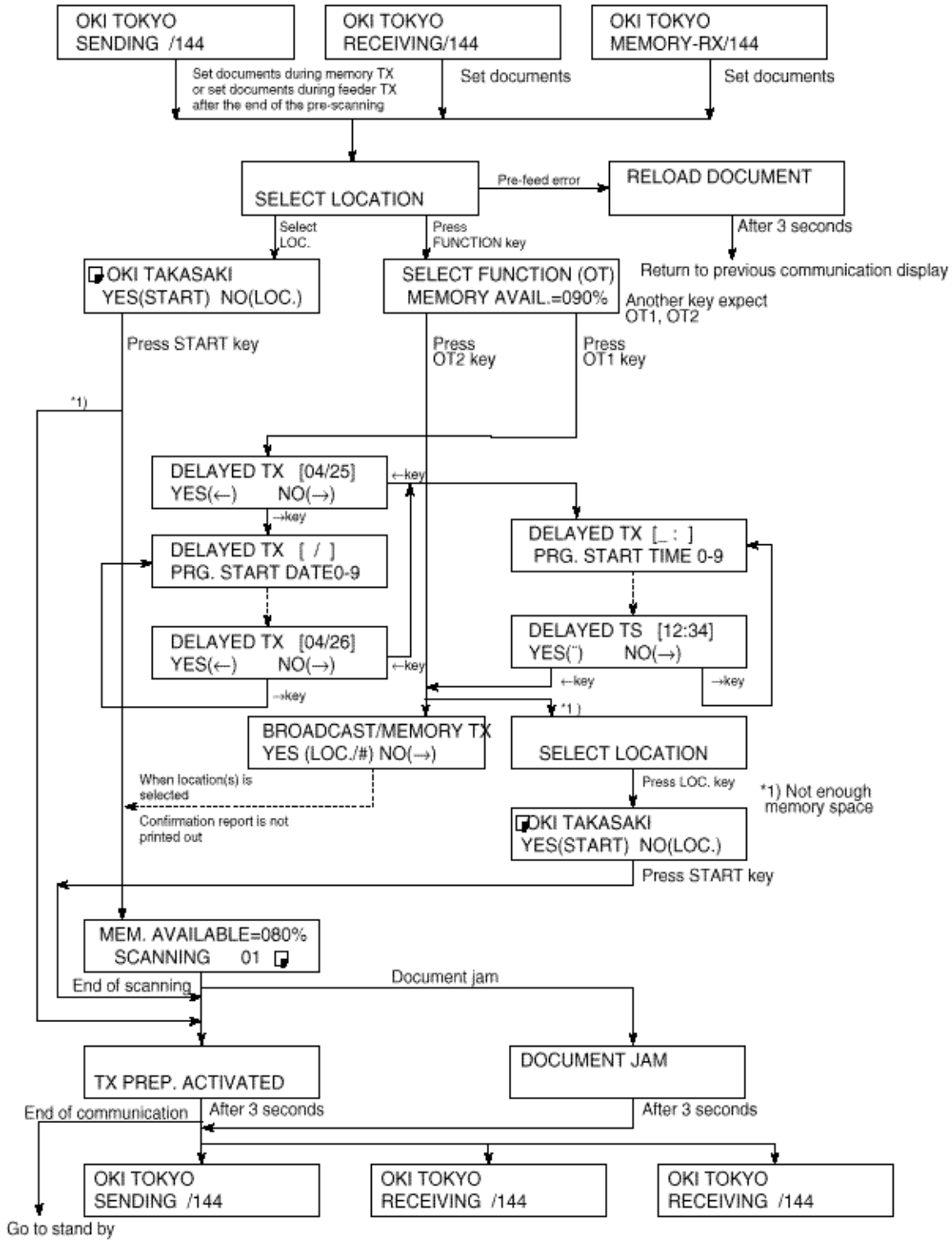

Copyright 1997, Okidata, Division of OKI America, Inc. All rights reserved. See the OKIDATA Business Partner Exchange (BPX) for any updates to this material. (http://bpx.okidata.com)

- TSI/CSI (Default: Blank)
- Registration of sender ID (Default: Blank)
- Registration of telephone number for the call-back message (Default: Blank)

Operations:

- To begin, press SELECT FUNCTION key once and one-touch key No. 9 in the standby mode.
  (with no message in memory)
- Enter 4 using the ten-key pad.
- Press ← key.

The display shows:

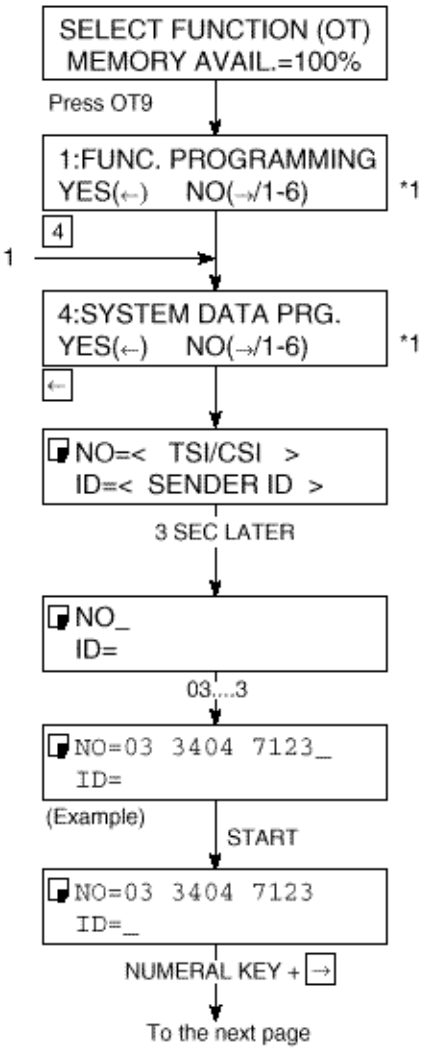

*1 OKIFAX 5300: NO (→/1-5)
OKIFAX 5600: NO (→/1-6)

Note: Use the UNIQUE key to input special symbols.

Operations:

The display shows:

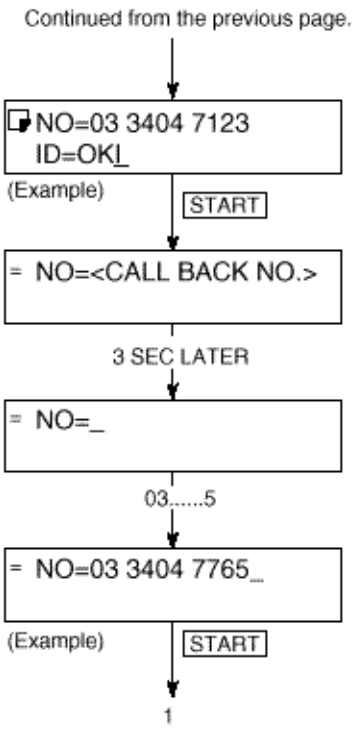

- Press START key.

- Press START key.

Copyright 1997, Okidata, Division of OKI America, Inc. All rights reserved. See the OKIDATA Business Partner Exchange (BPX) for any updates to this material. (http://bpx.okidata.com)

(1) Procedure (Service Bit "ON")

Operations:

- To begin, press SELECT FUNCTION key once and one-touch key No. 9 in the standby mode. (with no message in memory)
- Enter 2 using the ten-key pad.
- Press ← key.

The display shows:

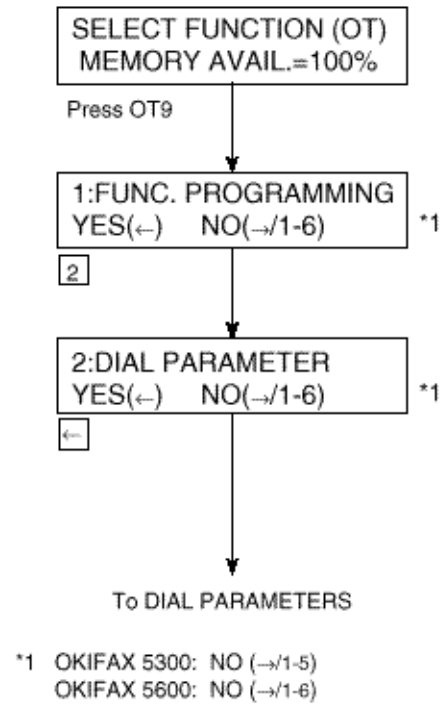

*1 OKIFAX 5300: NO (→/1-5)
OKIFAX 5600: NO (→/1-6)

The display shows:

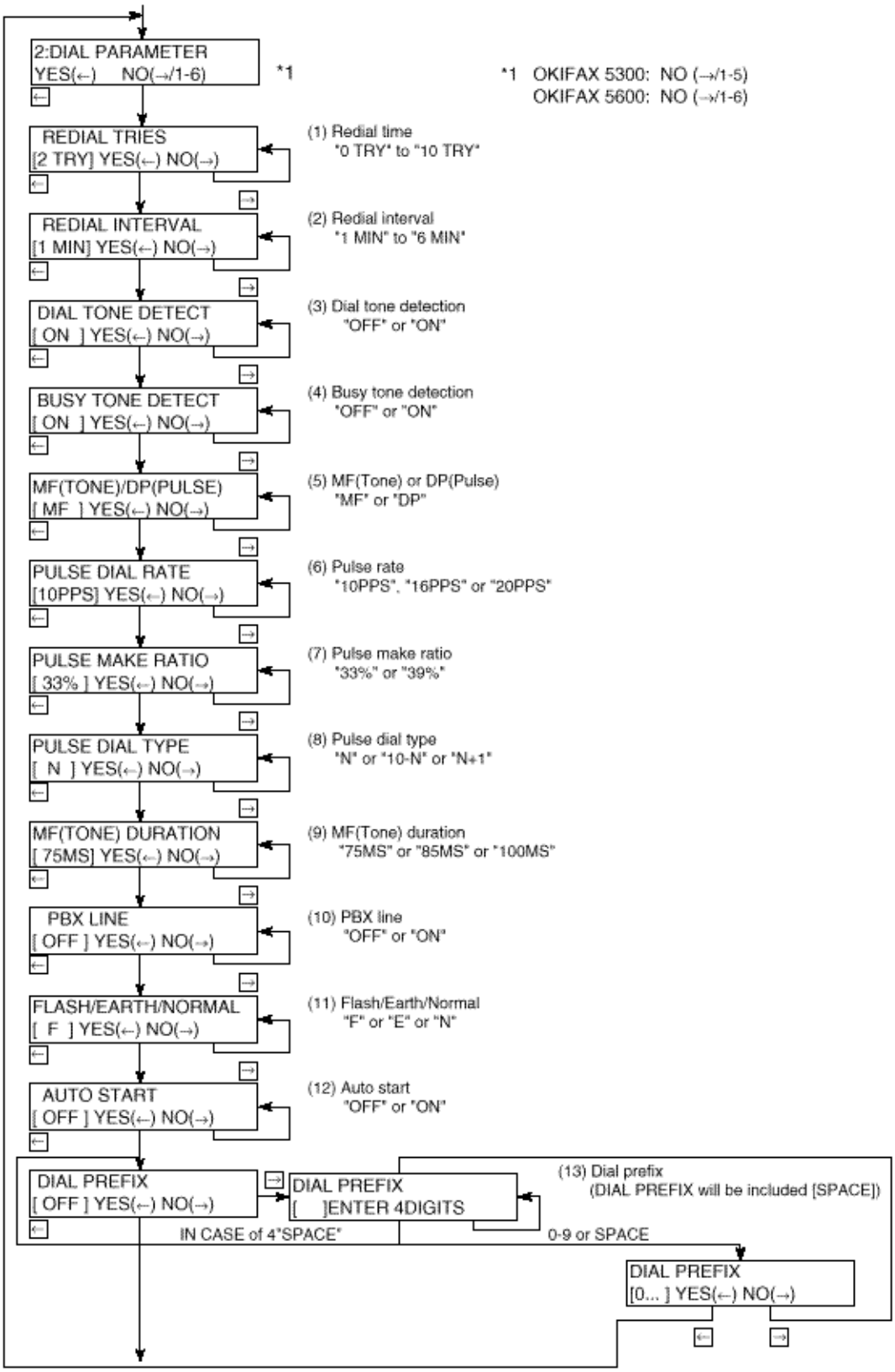

*1 OKIFAX 5300: NO (→/1-5)
OKIFAX 5600: NO (→/1-6)

Copyright 1997, Okidata, Division of OKI America, Inc. All rights reserved. See the OKIDATA Business Partner Exchange (BPX) for any updates to this material. (http://bpx.okidata.com)

No.	Item	Specifications	Default
01	Redial tries	Switches on the re-dial times to meet the regulations of the installed country. 0 to 10 tries (in one-try steps) 1 to 5 tries for FRE.	3
02	Redial interval	Switches on the re-dial intervals to meet the regulations of installed country. 1 to 6 minutes (in one-minute steps) 1 to 12 minutes for FRE.	3
03	Dial tone detect	Selects the dial tone detection. ON/OFF selectable. ON: Enable OFF: Disable	OFF
04	Busy tone detect	Selects the busy tone detection. ON/OFF selectable. ON: Enable OFF: Disable	ON
05	MF (TONE) or DP (Pulse)	Selects dialing by multi-frequency or dial pulse.	MF (TONE)
06	Pulse dial rate	Selects the dialing pulse rates for the line. 10 pps/16 pps/20 pps selectable.	10 pps
07	Pulse make ratio	Selects pulse dial rate. 33%/39%	39%
08	Pulse dial type	Selects pulse dial type. Normal (N/10-N/N+1	Normal (N)
09	MF (Tone) duration	Selects MF (Tone) duration. 75/85/100 ms selectable.	100 ms
10	PBX line	Selects PBX line. ON/OFF selectable. ON: PBX line OFF: PSTN	OFF
11	Flash/Earth/Normal	Selects the PBX type to meet the exchange requirements. NORMAL/EARTH/FLASH selectable. (PBX line origination types)	NORMAL

12	Auto start	Enables or disables the function of dialing without pressing the START key in one-touch dial and 2-digit auto dial modes. ON: Enable OFF: Disable	ON
13	Access digit	Prefix dialing digits with which PBX connects the fax to the public line. OFF/max. 4digit(s) selectable. Digit: Enable OFF: Disable	OFF

Copyright 1997, Okidata, Division of OKI America, Inc. All rights reserved. See the OKIDATA Business Partner Exchange (BPX) for any updates to this material. (http://bpx.okidata.com)

(1) Purpose

Activate self-diagnosis which includes:

- Print test
- CPU-ROM version printing
- CPU-RAM check
- PROG version printing
- LANGUAGE version printing
- DEFAULT version printing
- RAM check
- RAM check (memory board: optional)
- PC-I/F version printing (optional)

(2) Procedure

Operations:

- To begin, press SELECT FUNCTION key once and COPY key twice in the standby mode. (with no message in memory)
- Press ← key.
- Press ← key.
- Press ← key for cheking and test printing. (An example of printed data is shown in Figure 2.9.4)

The display shows:

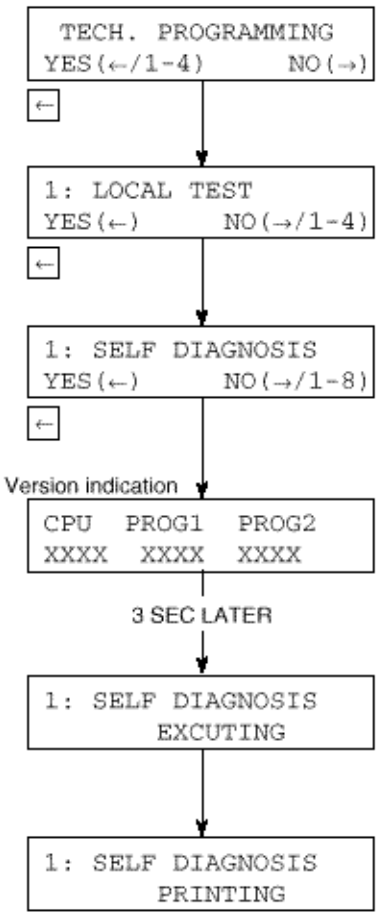

Self-Diagnosis Print Test (Example) Fig. 2.9.4

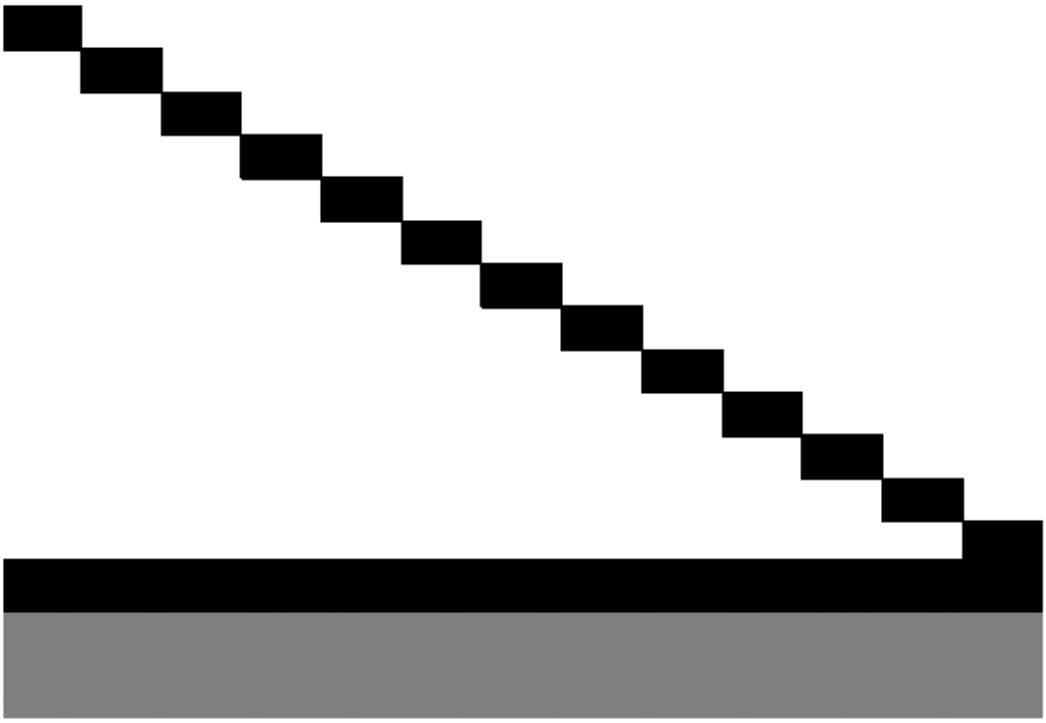

	CPU-ROM	VERSION	AA00	
		HASH	OK	DACD
	CPU-RAM		OK	
	PROG1	VERSION	AA00	
		HASH	OK	3142
	PROG2	VERSION	AA00	
		HASH	OK	1234
	LANGUAGE		VERSION	LL10
		HASH	OK	3F06
	DEFAULT	VERSION	DD10	
		HASH	OK	A683
*1	RAM1		1M	OK
*2	RAM2		OK	
*3	OPT-RAM1		1M	OK
*3	OPT-I/F		PARALLEL	
	DEFAULT TYPE		01	07/01/96

*1 marked item is shown for condition of all RAM except EXCEED RAM.

*2 marked item is shown to SRAM for EXCEED.

*3 marked items are option.

Copyright 1997, Okidata, Division of OKI America, Inc. All rights reserved. See the OKIDATA Business Partner Exchange (BPX) for any updates to this material. (http://bpx.okidata.com)

1. Transmission

(1) Load documents

(2) Make sure that

- The loaded documents are fed in automatically.
- The STD and NORMAL lamps light.
- The display shows SELECT LOCATION.

(3) Dial the telephone number of the remote machine by the ten-key pad.

(4) Make sure that the telephone number of the remote machine is shown on the display.

(5) Press the START button.

(6) Typical message transmission flow is described in Figure 2.9.5 below.

2. Reception

(1) Use another machine for dialing.

(2) Make sure that

- The display shows AUTO REC. START.
- The message is automatically received.

(3) Typical message reception flow is described in Figure 2.9.6 below.

Typical Transmission Flow (Fig. 2.9.5)

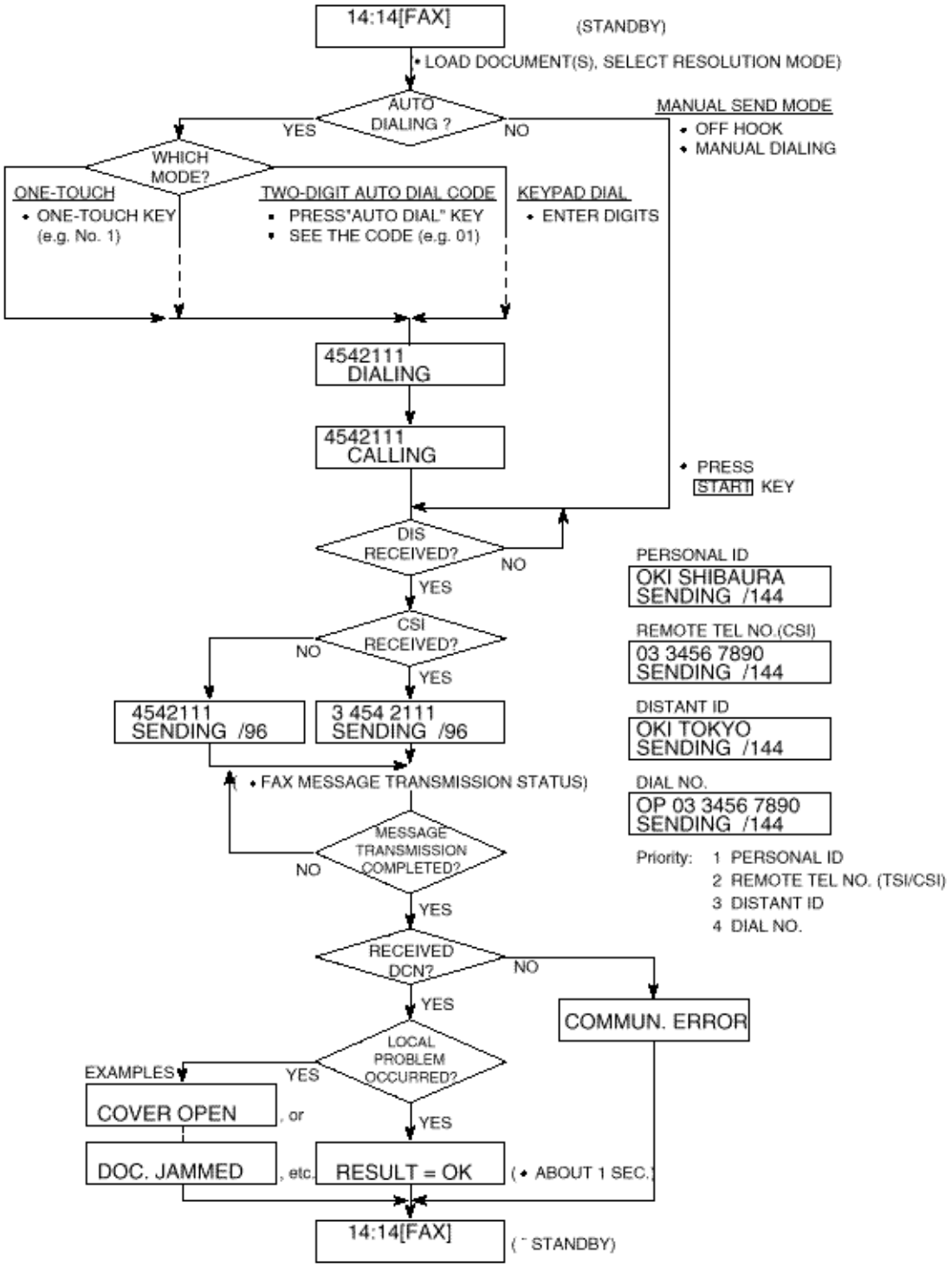

Typical Reception Flow (Fig. 2.9.6)

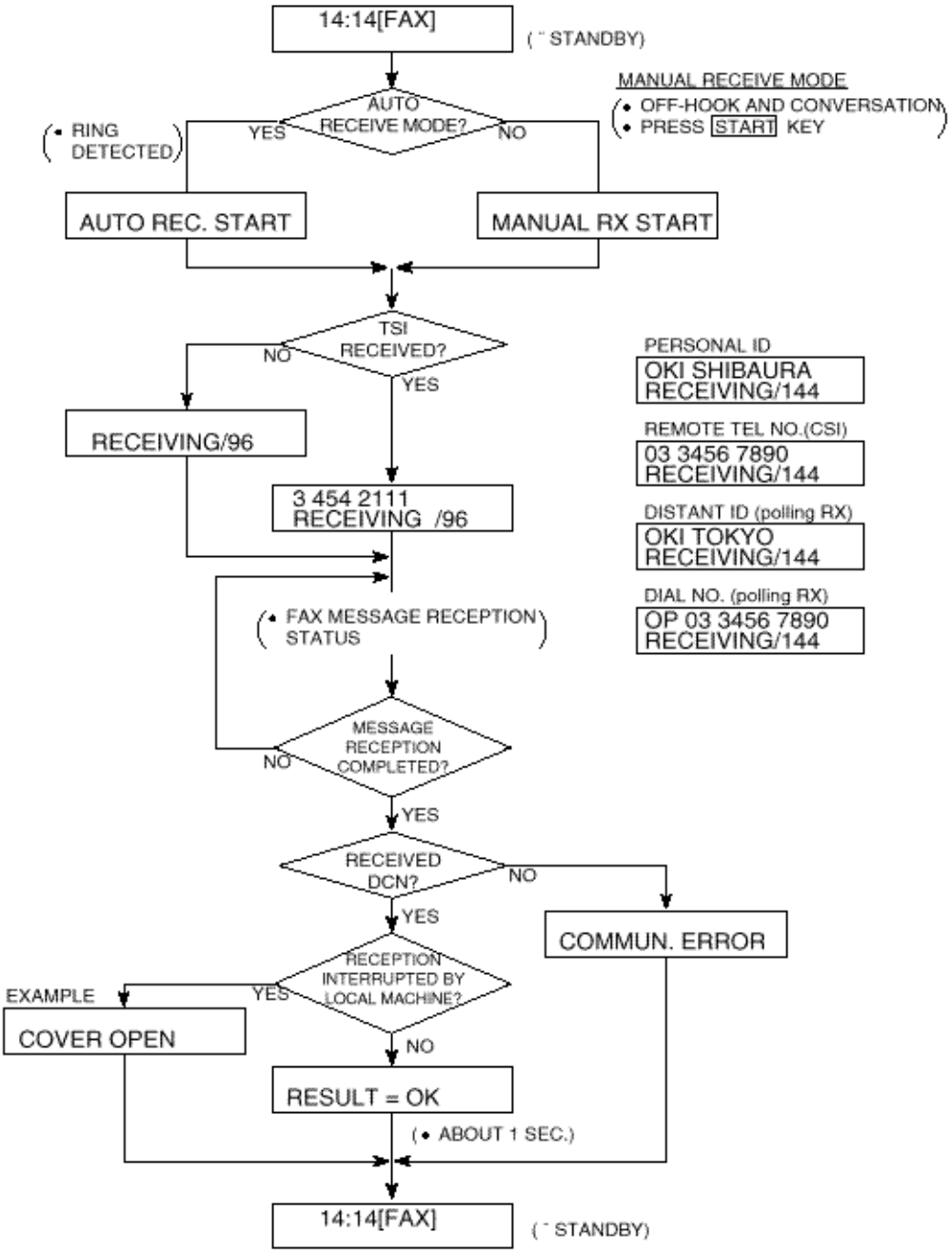

Copyright 1997, Okidata, Division of OKI America, Inc. All rights reserved. See the OKIDATA Business Partner Exchange (BPX) for any updates to this material. (http://bpx.okidata.com)

(1) Items

- Memory board
- PC interface board
- Telephone handset
- Second paper cassette unit

(2) Procedure

- Turn the facsimile power switch OFF and remove the AC power cord.

Note:

Unplug the AC power cord from the wall outlet first and then from the facsimile.

- Do not remove unnecessary parts.
- Since screws and small parts are likely to be lost, they should temporarily be attached to their original positions.

Copyright 1997, Okidata, Division of OKI America, Inc. All rights reserved. See the OKIDATA Business Partner Exchange (BPX) for any updates to this material. (http://bpx.okidata.com)

- MEM, 1 or 2MB memory board, can be mounted on to the connector CN13 of M17 board.

Remove Rear Cover.

Remove the rear cover by removing the two screws S1 and S2 .

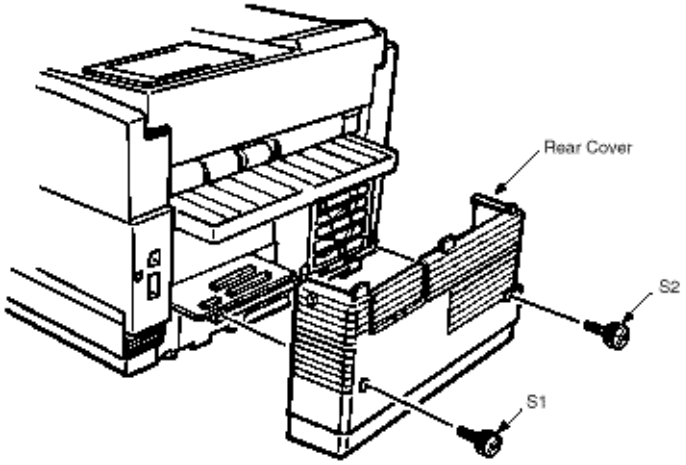

Fig. C.1.3

Install Memory Board: First, install the memory board on to the connector CN13 of R17 board, and then tighten the screw to the separation plate.

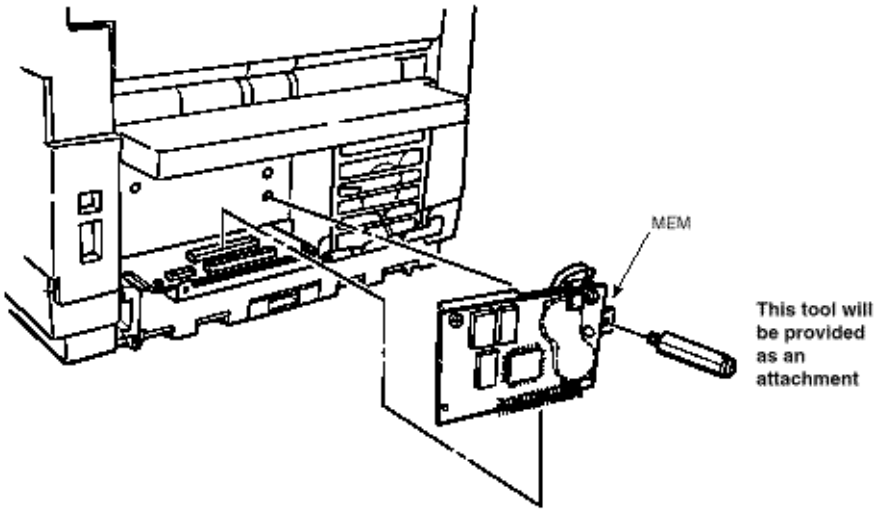

Fig. C.1.4

Note:

Fit the fixing hooks at anchor positions on the cassette guide, after that, lift the rear cover slightly and push it inward.

Tighten the two screws S1 and S2.

Copyright 1997, Okidata, Division of OKI America, Inc. All rights reserved. See the OKIDATA Business Partner Exchange (BPX) for any updates to this material. (http://bpx.okidata.com)

Rear Cover
Remove Rear Cover.
Remove the rear cover by removing the two screws S1 and S2 .

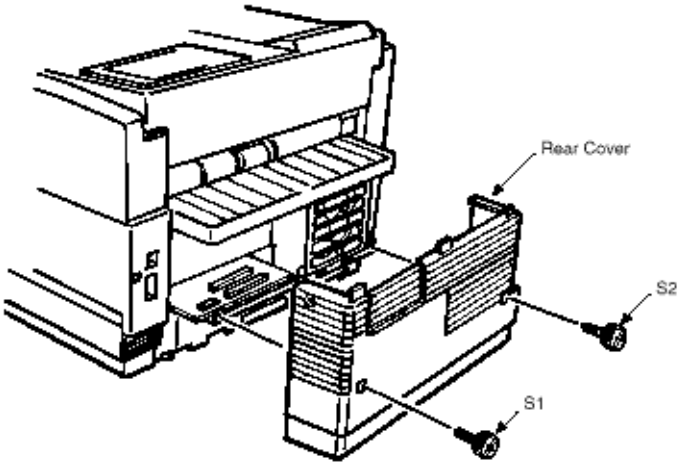

Fig. C.2.3
Install CTR board.
First, install CTR board on to the connector CN12, CN17 of M17 board, and then tighten the two screws to the separa-tion plate.

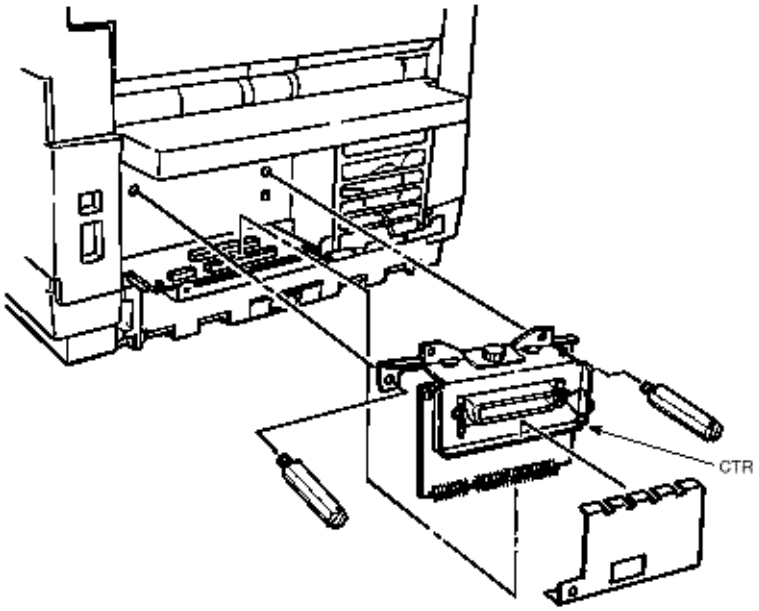

Fig. C.2.4

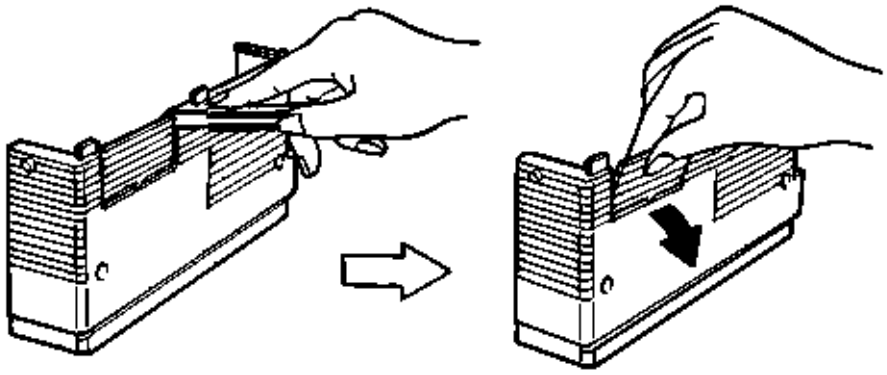

a) Insert the tip of a cutter or nipper between the mold of Rear Cover and detach the cut-out from the larger cover piece.
Note: Be careful not to scratch the rear cover.
b) Work the cut-out free and remove it.

Copyright 1997, Okidata, Division of OKI America, Inc. All rights reserved. See the OKIDATA Business Partner Exchange (BPX) for any updates to this material. (http://bpx.okidata.com)

(1) After having taken out the telephone set, telephone handset and curled cord from the carton box, connect
them as show in Fig. C.3.2 below.

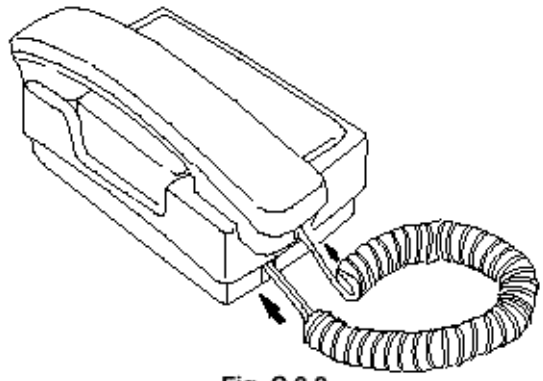

Fig. C.3.2

(2) After installing the connection cable to the telephone set, extend the connection cable (Fig. C.3.3.)

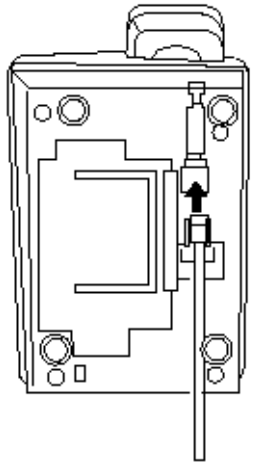

Fig. C.3.3

(3) After installing the cradle assembly to the telephone set, fix the screw (Fig. C.3.4.)

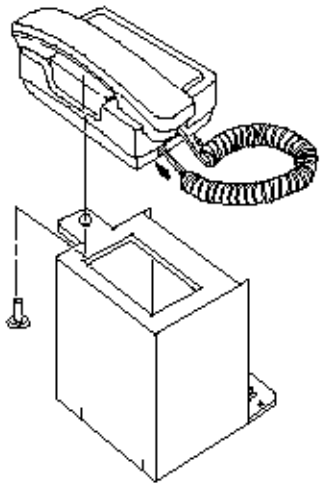

Fig. C.3.4

(4) Install the telephone assembly on the facsimile transceiver unit. In this case, cram the telephone assembly into the position of Fig. C.3.5 by lifting the facsimile transceiver unit slightly. When 2'nd tray is mounted on the facsimile transceiver unit, install the telephone assembly in the position of Fig. C.3.5.

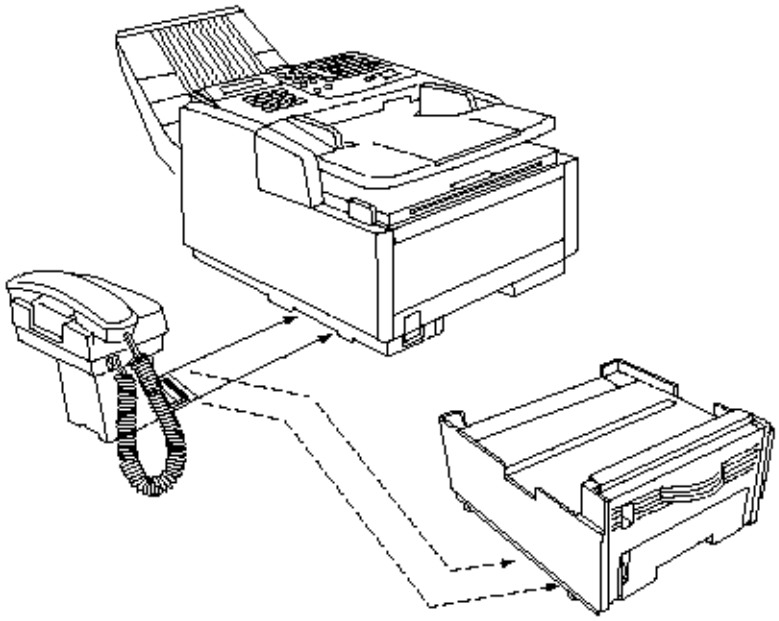

(5) Connect the terminal on the other side of the connection cable formed on the rear side of the equipment, like Fig. C.3.6, to the telephone set.

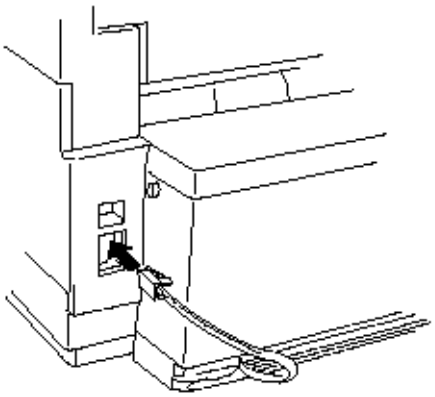

Fig. C.3.6

Copyright 1997, Okidata, Division of OKI America, Inc. All rights reserved. See the OKIDATA Business Partner Exchange (BPX) for any updates to this material. (http://bpx.okidata.com)

This item explains how to install the Second Paper Cassette Unit option.

This Second Paper Cassette Unit comes with a Second Front and Facsimile Connector Cable.

Installation

1. Turn the facsimile power switch off and remove the AC power cord.

Note: Unplug the AC power cord from the wall outlet first and then from the facsimile.

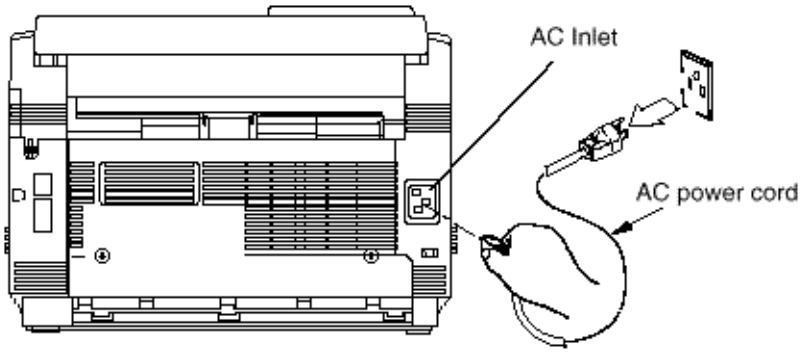

Figure C.2.1

2. Open the Manual Feed Guide.

NOTE:
The manual feed guide must remain open when the unit is mounted on a second paper cassette unit.

If the manual feed guide is closed, input paper jams will result.

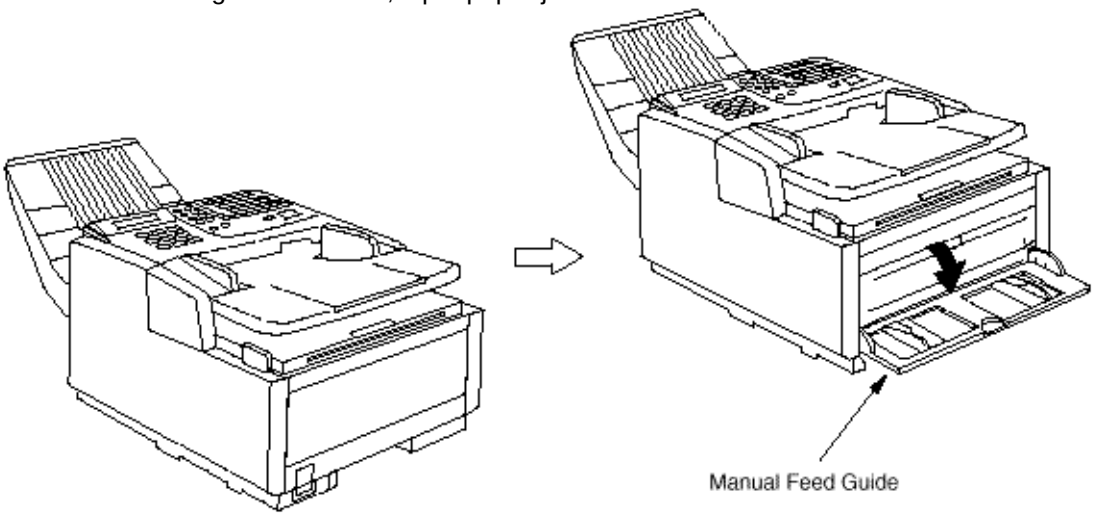

Figure C.2.2

3. Gently lower the facsimile on the Second Paper Cassette Unit.

Note: Make sure that the positioning boss of the Second Paper Cassette Unit fits into the 2 holes at the bottom of the facsimile transceiver main unit.

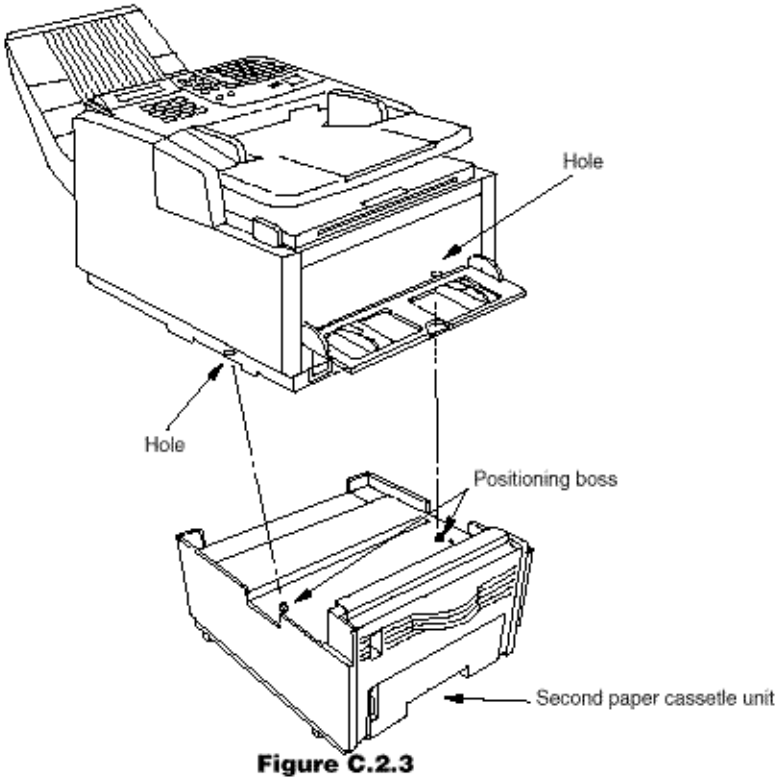

Figure C.2.3

4. Peel off the tape attached on the Second Paper Cassette Unit.

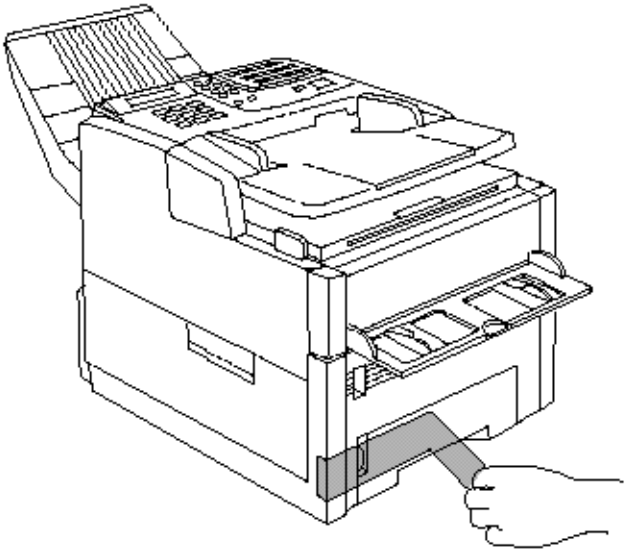

Figure C.2.4

5. Install the Second Paper Cassette. Approximately 500 sheets of recording paper (20-Ib bond) can be loaded.

6. Reconnect the power cord to the wall and the facsimile, and turn the facsimile power on.

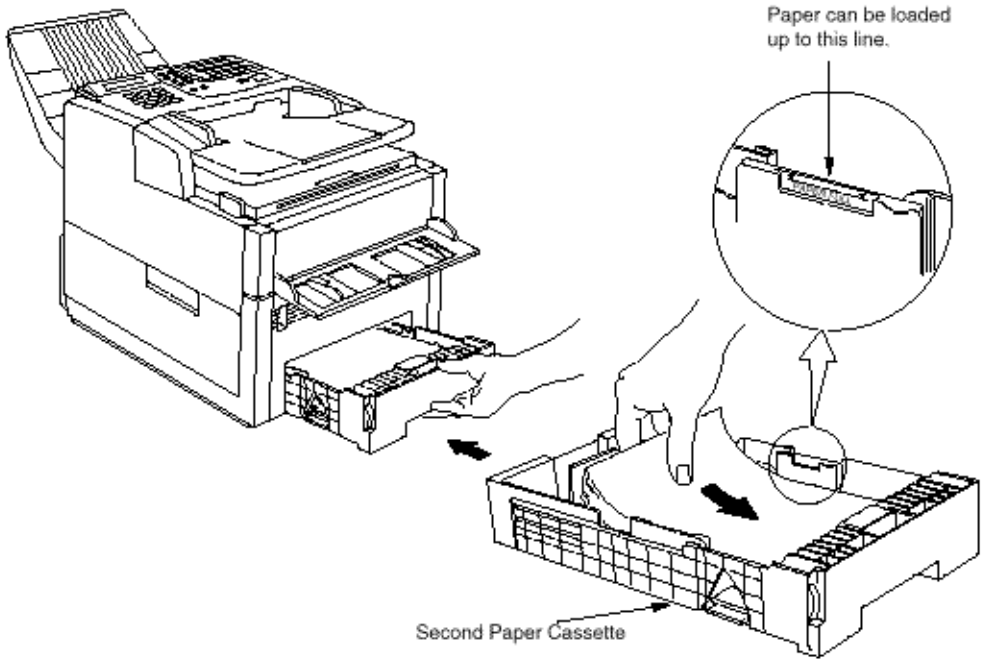

Figure C.2.5

Copyright 1997, Okidata, Division of OKI America, Inc. All rights reserved. See the OKIDATA Business Partner Exchange (BPX) for any updates to this material. (http://bpx.okidata.com)

The electro-photographic process involves six sub-processes:

(1) Charging (2) Exposure (3) Development (4) Transfer (5) Fusing (6) Cleaning

The outline of each process is explained below.

Process	Illustration	Description
1 Charging	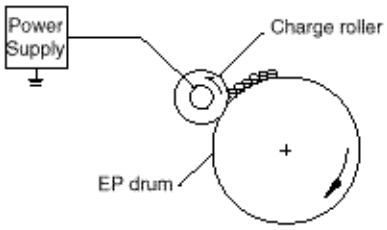	The surface of the electro-photographic Image drum is uniformly charged with negative charges by applying a negative voltage to the charge roller. When the applied DC voltage exceeds a threshold value, charging of the drum begins.
2 Exposure	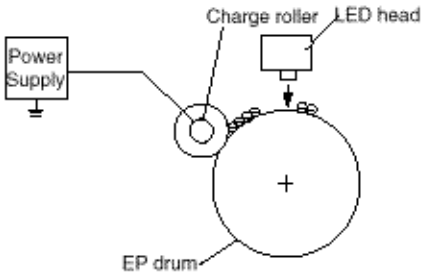	Light emitted from the LED head irradiates the negatively charged surface. The potential of the irradiated part of the Image drum surface is raised, so that an electrostatic latent image associated with the print image is formed.
3 Development	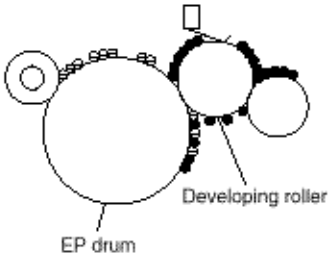	Toner is attracted to the exposed part (high-potential part) of the Image drum at the contact between the Image drum and the developing roller, making the electrostatic latent image visible. At the same time, the residual toner on the Image drum is attracted to the developing roller by static electricity.

Process	Illustration	Description
4 Transfer	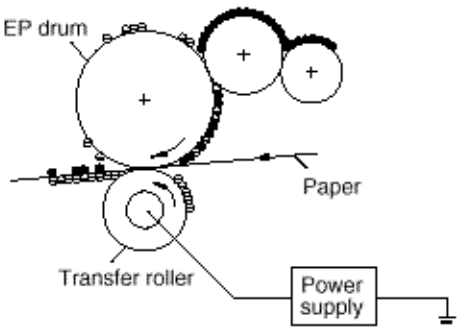	The recording paper is placed over the Image drum surface and a positive charge, opposite in polarity to the toner, is applied to the reverse side of the paper from the transfer roller. The toner is attracted by the positive charge and is transferred to the paper. The toner charged negative that is attracted to the Image drum surface is transferred to the upper side of the recording paper by the positive charge on the lower side of the paper.
5 Fusing	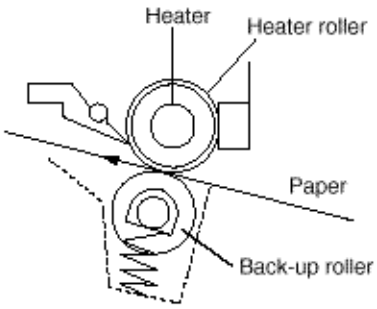	The unfused toner image is fused on the paper under heat and pressure as it passes between the heater roller and the back-up roller.
6 Cleaning	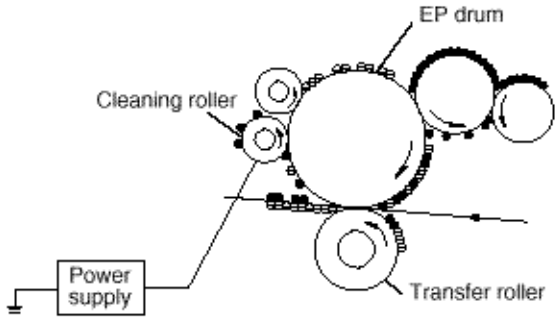	Residual toner on the Image drum is attracted to the cleaning roller temporarily by static electricity on the Image drum surface.

Copyright 1997, Okidata, Division of OKI America, Inc. All rights reserved. See the OKIDATA Business Partner Exchange (BPX) for any updates to this material. (http://bpx.okidata.com)

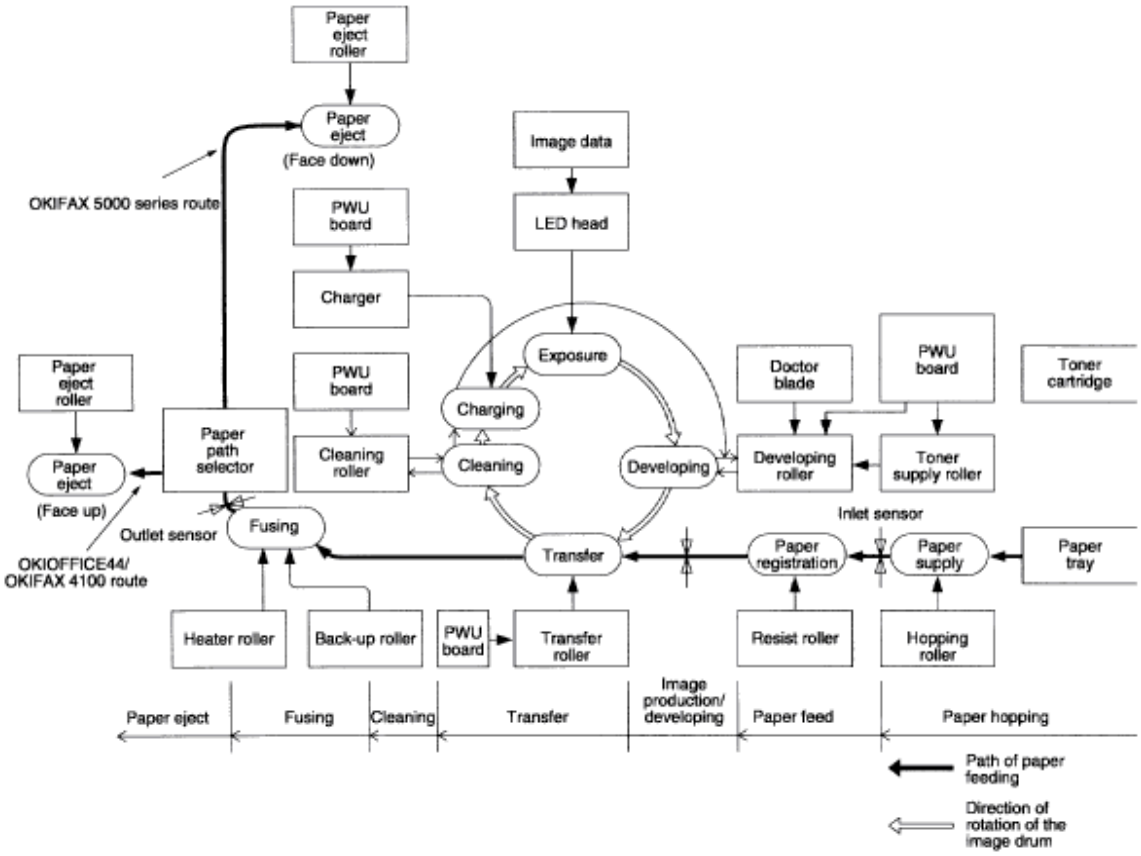

Copyright 1997, Okidata, Division of OKI America, Inc. All rights reserved. See the OKIDATA Business Partner Exchange (BPX) for any updates to this material. (http://bpx.okidata.com)

The electro-photographic process consists of six essential processes.

The following Figure 3.2.1 provides a general description.

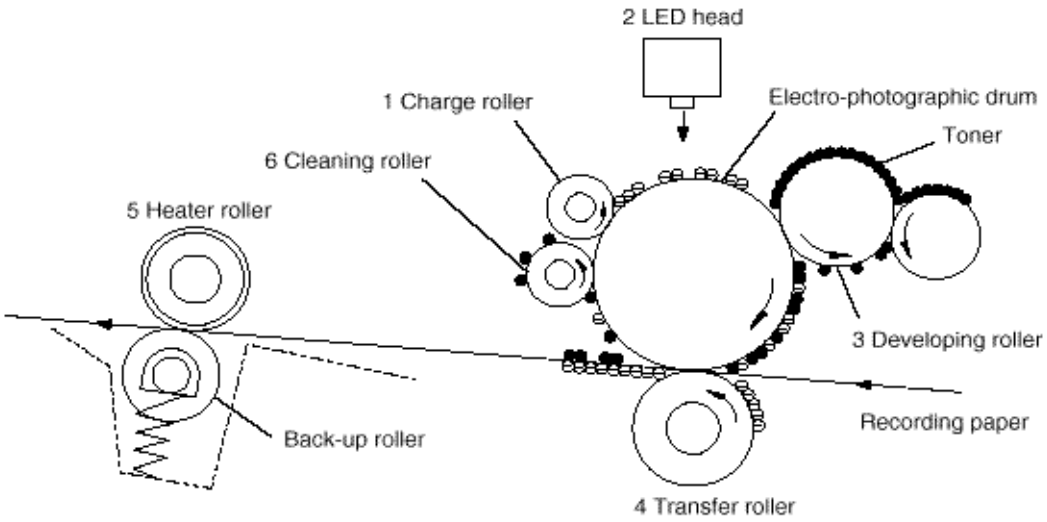

* Process:

1 : Charging
2 : Exposure
3 : Developing
4 : Transfer
5 : Fusing
6 : Cleaning

Figure 3.2.1 Actual EP Process

Copyright 1997, Okidata, Division of OKI America, Inc. All rights reserved. See the OKIDATA Business Partner Exchange (BPX) for any updates to this material. (http://bpx.okidata.com)

The following three boards, Memory board (option), Telephone interface board (option), PC interface board (option) and three units constitute the OKIFAX 5300/5600 units.

Main control board	MCNT:	(M17; OKIFAX 5000 series)
Modem board (for OKIFAX 5500/5600)	MODEM:	(MODE; 28.8kbps)
Network control unit board	NCU:	(UNC)
Memory board (option)	MEM:	(MEM; 1/2MB for OKIFAX 5000 series)
Telephone interface board (option)	TEL:	(TEL-U, NTIF, HOOK, 10 KEY)
PC interface board (option)	Bi-Centro I/F:	(CTR)
2nd tray interface board (option)	2ND TRAY I/F:	(TQSB)
Operation panel assembly unit	OPE:	(O5W)
Power supply unit	POW UNIT:	(120/230, SPSU;120V/230V)
Printer unit		

Figure 3.3.2 shows the related drawing of OKIFAX 5300/5600 series facsimile transceiver.

Note: The contact image sensor and electromagnetically driven parts compose the so-called Scan Unit.

Copyright 1997, Okidata, Division of OKI America, Inc. All rights reserved. See the OKIDATA Business Partner Exchange (BPX) for any updates to this material. (http://bpx.okidata.com)

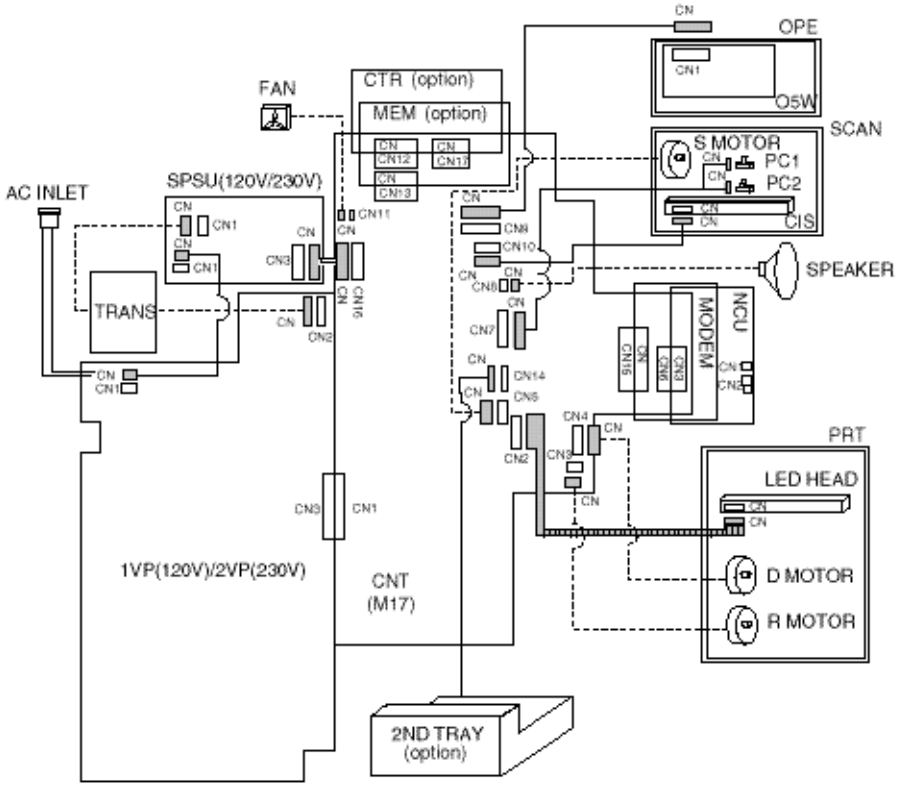

Copyright 1997, Okidata, Division of OKI America, Inc. All rights reserved. See the OKIDATA Business Partner Exchange (BPX) for any updates to this material. (http://bpx.okidata.com)

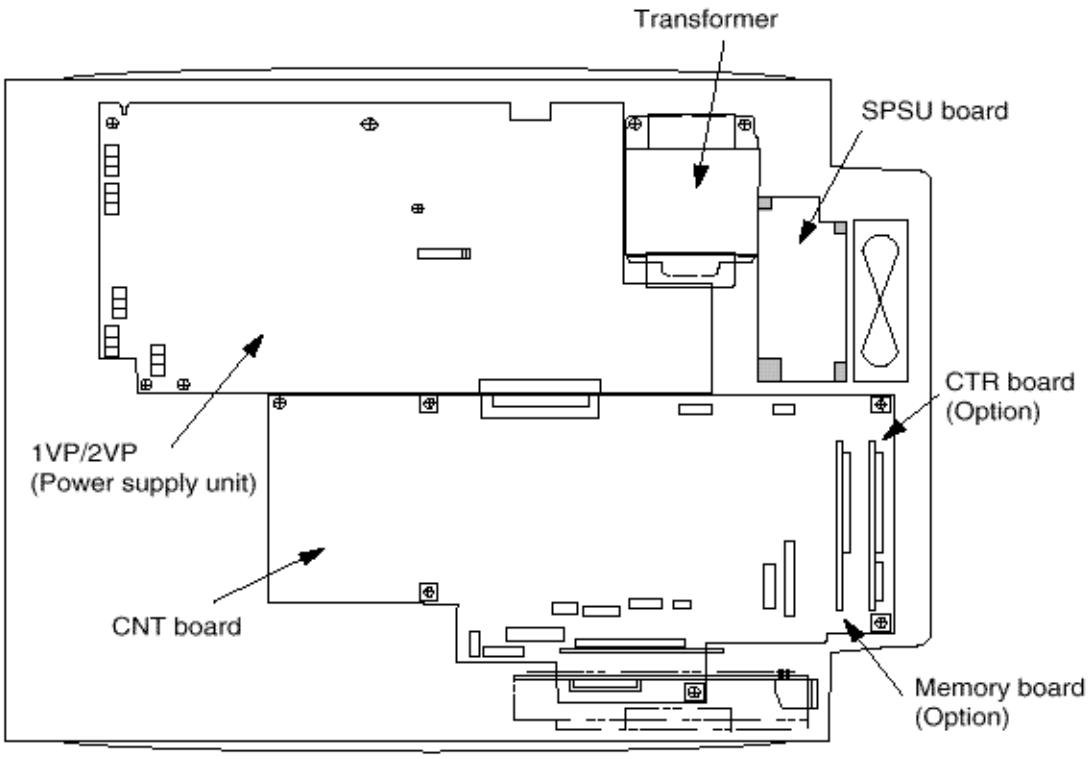
Transformer
SPSU board
CTR board
(Option)
1VP/2VP
(Power supply unit)
CNT board
Memory board
(Option)

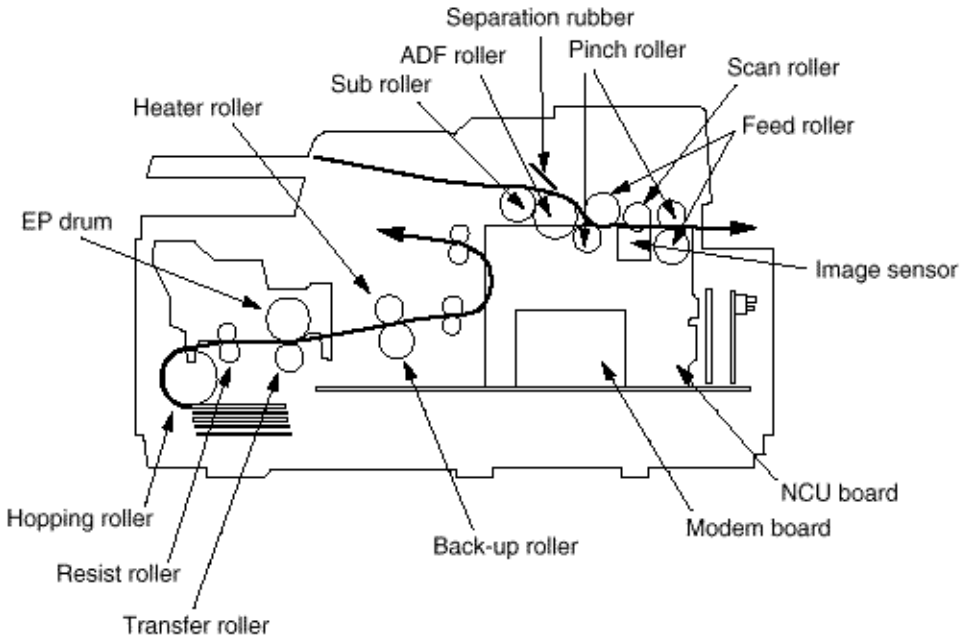

Figure 3.5.1 Overall Dimension and Mechanical Structure

Copyright 1997, Okidata, Division of OKI America, Inc. All rights reserved. See the OKIDATA Business Partner Exchange (BPX) for any updates to this material. (http://bpx.okidata.com)

Service Manual for OF5300/5600

Chapter 4 Disassembly

This chapter explains the procedures for replacement of assemblies and units in the field.

Copyright 1997, Okidata, Division of OKI America, Inc. All rights reserved. See the OKIDATA Business Partner Exchange (BPX) for any updates to this material. (http://bpx.okidata.com)

(1) Before starting disassembly and reassembly, always turn the AC power switch OFF, and pull out the AC plug.

Note: Unplug the AC power cord from the wall outlet first and then from the facsimile.

(2) Do not try to disassemble as long as the facsimile is operating normally.

(3) Do not remove unnecessary parts: Try to keep disassembly to a minimum.

(4) When disassembling, follow the prescribed sequence. Otherwise, parts may be damaged.

(5) Since screws and small parts are likely to be lost, they should temporarily be attached to their original positions.

(6) When handling items such as printed circuit boards, do not wear gloves that are likely to generate static electricity.

(7) Using a wrist band connected to the ground will protect semiconductors on printed circuit boards from damage by the static electricity.

(8) Do not place printed circuit boards directly on the equipment or on the floor.

Board or Part Adjustment

(a)	NCU board	DIP switches to be placed in the same position as on the removed board. Refer to Chapter 8.
	Note:	The DIP switches setting is subject to change by PTT parameters. WN5, DN5 and FN5 board (Except for USA/Canada version)
(b)	LED print head	When the rank marking of the replaced LED print head (new part) is the same as that of the used LED print head (old part), you do not always have to set the LED print head strobe time by the technical function No. 27. (Refer to Chapter 5)

Copyright 1997, Okidata, Division of OKI America, Inc. All rights reserved. See the OKIDATA Business Partner Exchange (BPX) for any updates to this material. (http://bpx.okidata.com)

Table 4.2.1 shows the tools required for the replacement of parts such as circuit boards and mechanical units.

Table 4.2.1 Tools

No.	Service tools		Q'ty	Remarks
1	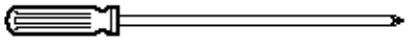	Philips screw driver (L)	1	
2		Philips screw driver (M)	1	
3		Philips screw driver (S)	1	
4		Flat screw drivers (S)	1	
5		Philips screw driver (S)	1	
6		Radio pliers	1	
7		Nippers	1	
8	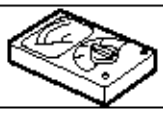	Multimeter	1	Short-ciucuit test

Copyright 1997, Okidata, Division of OKI America, Inc. All rights reserved. See the OKIDATA Business Partner Exchange (BPX) for any updates to this material. (http://bpx.okidata.com)

Service Manual for OF5300/5600

Chapter 4 Disassembly

This section explains how to disassemble and reassemble the fax.

- Figure 4.2 shows the disassembly procedure flow as generalization.
- The detailed disassembly procedure is explained from sub-section 4.2.3.1 to 4.2.3.8.

Copyright 1997, Okidata, Division of OKI America, Inc. All rights reserved. See the OKIDATA Business Partner Exchange (BPX) for any updates to this material. (http://bpx.okidata.com)

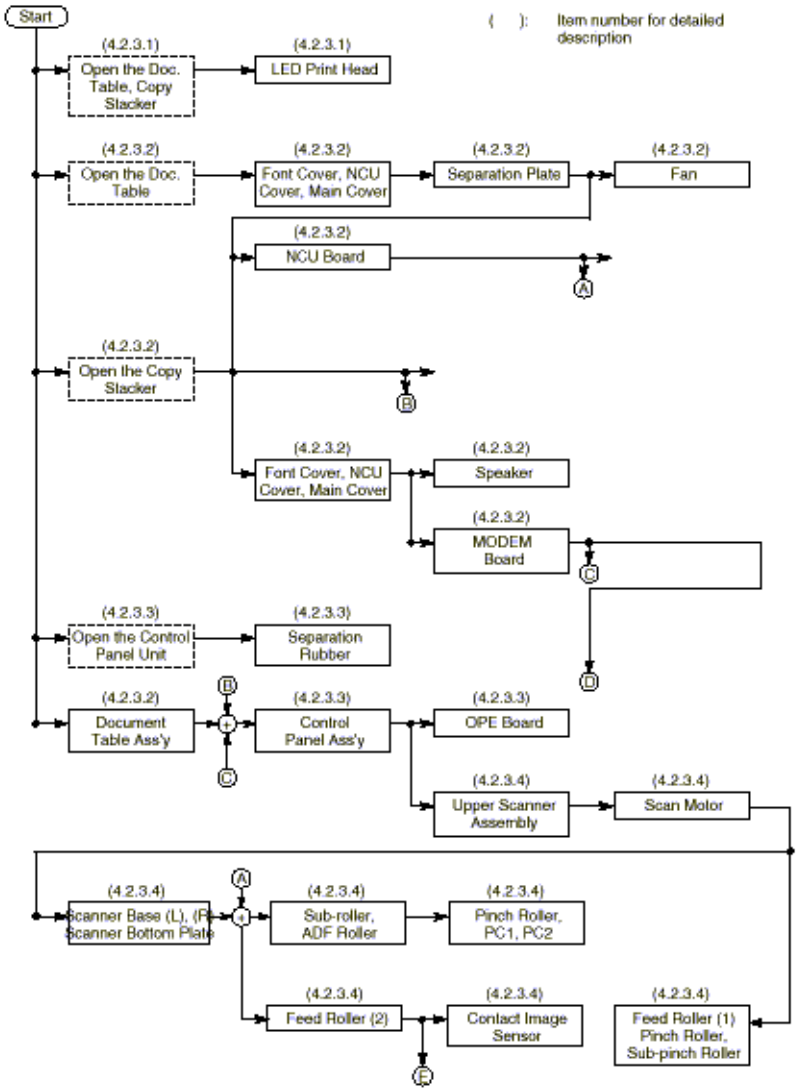

Copyright 1997, Okidata, Division of OKI America, Inc. All rights reserved. See the OKIDATA Business Partner Exchange (BPX) for any updates to this material. (http://bpx.okidata.com)

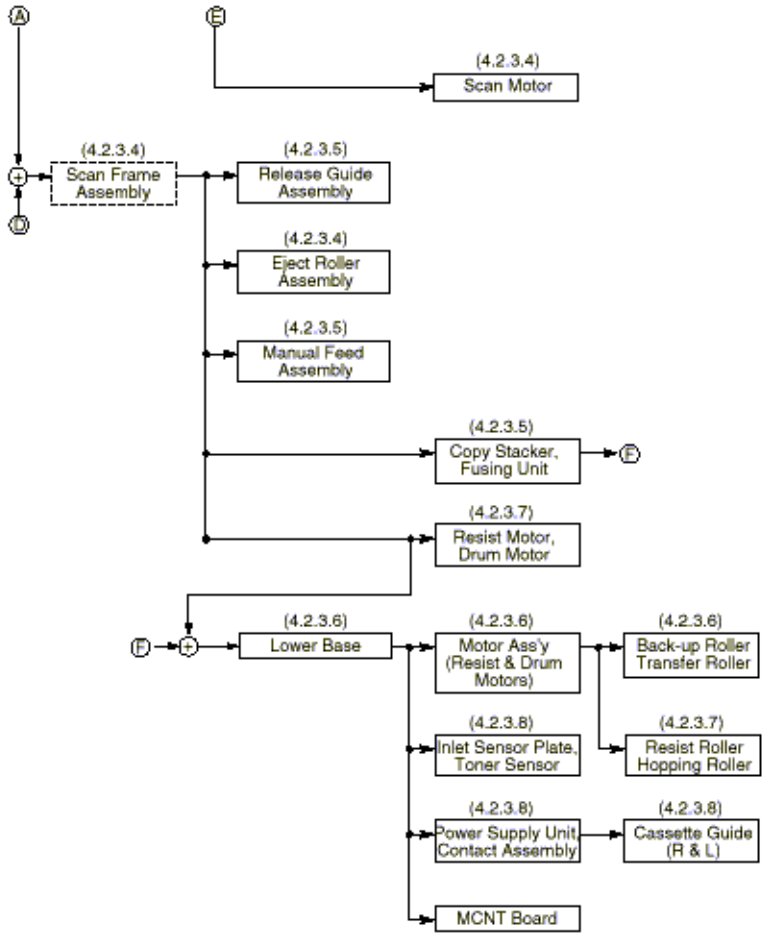

Copyright 1997, Okidata, Division of OKI America, Inc. All rights reserved. See the OKIDATA Business Partner Exchange (BPX) for any updates to this material. (http://bpx.okidata.com)

Two kinds of LED print heads are available.
208 mm (8.19 inches) width or
216 mm (8.50 inches) width

(1) Disassembly procedure

a) Open the Document Table assembly.

b) Open the Stacker Cover by pushing the Buttons.

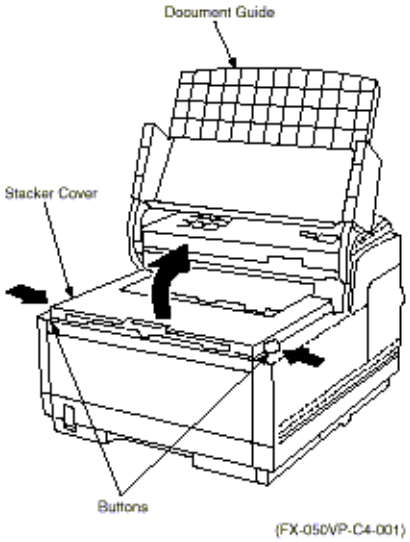

(FX-050VP-C4-001)

c) Disconnect the PC connector from the LED print head.

d) Disconnect the flat cable from the PC connector.

e) Remove the LED print head while spreading the retainer on the Stacker Cover.

Note:

Be sure not to touch directly or push the SLA part of the LED print head.

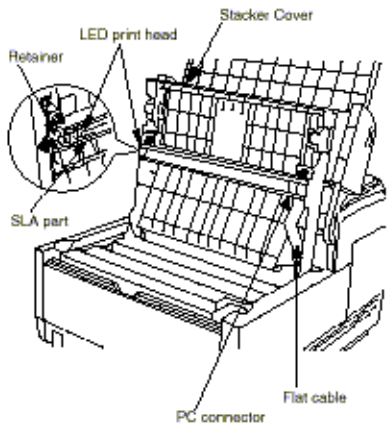

(FX-050VP-C4-002)

(2) Reassembly procedure

Reverse the disassembly procedures.

Note:

After replacing the LED print head, set drive time of the LED print head following the marking. (Refer to section 5.1). When you replace the LED print head, if the width of the LED head to be used is changed from current version, you should select the head width by the service personnel initial setting (No. 28). (Refer to table 2.9.1 TF No. 28)

Copyright 1997, Okidata, Division of OKI America, Inc. All rights reserved. See the OKIDATA Business Partner Exchange (BPX) for any updates to this material. (http://bpx.okidata.com)

(1) Disassembly procedure

1) ID Unit, Rear Cover, NCU Cover, Main Cover

a) Open the Document Guide assembly.

b) Open the stack cover by removing the buttons.

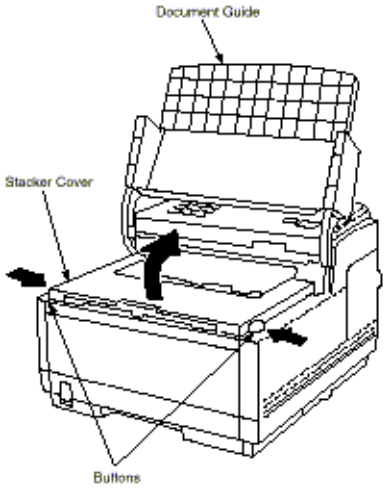

(FX-050VP-C4-001)

c) Take out the ID Unit from the equipment.

d) Remove the two screws 1.

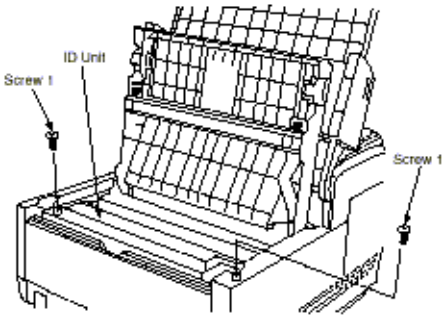

(FX-050VP-C4-003)

e) Remove the Rear Cover by removing the two screws 2.

f) Remove the NCU Cover by removing the screws 3.

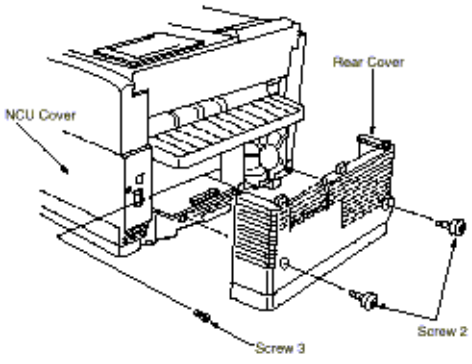

(FX-050VP-C4-004)

g) First, open the Main Cover from the front side, and then, remove the Main Cover by removing the nails at both sides on the rear side.

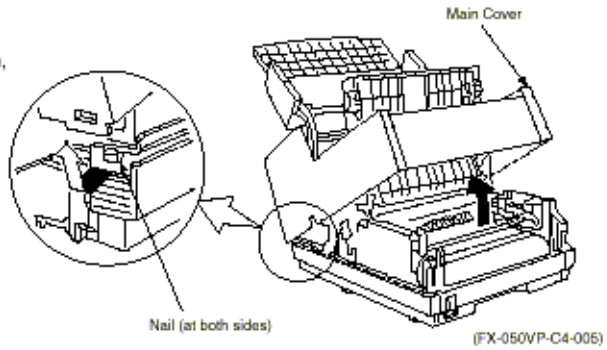

(FX-050VP-C4-005)

2) Separation Plate

a) Remove the Separation Plate by removing the two screws 4.

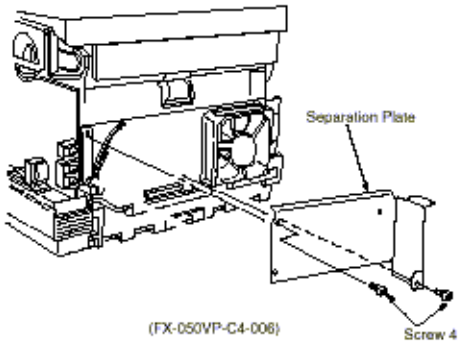

(FX-050VP-C4-006)

3) NCU Board, MODEM Board

a) Remove the NCU Board by removing the two screws 5.

b) Remove the MODEM Board by removing the screw 6.
- OKIFAX 5300: 14.4 kbps board normally mounted.
- OKIFAX 5600: 28.8 kbps board normally mounted.

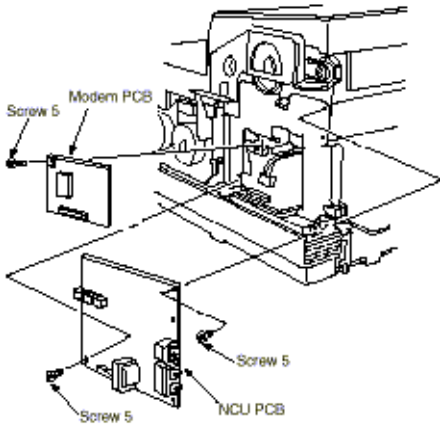

(FX-050VP-C4-007)

(2) Reassembly procedure

Reverse the disassembly procedures.

Copyright 1997, Okidata, Division of OKI America, Inc. All rights reserved. See the OKIDATA Business Partner Exchange (BPX) for any updates to this material. (http://bpx.okidata.com)

(1) Disassembly procedure

1) Control Panel Assembly and Paper Guide (U) Assembly

a) First, carry out the disassembly procedure up to the point of the 4.2.3.2 (Main Cover, NCU Cover and Rear Cover).

b) Remove the ground cable by removing the screw 1.

c) Disconnect the connector of the Control Panel from the MCNT Board.

d) The removal of the two screws 2 results into two separate assemblies: Control Panel Assembly and Paper Guide (U) Assembly.

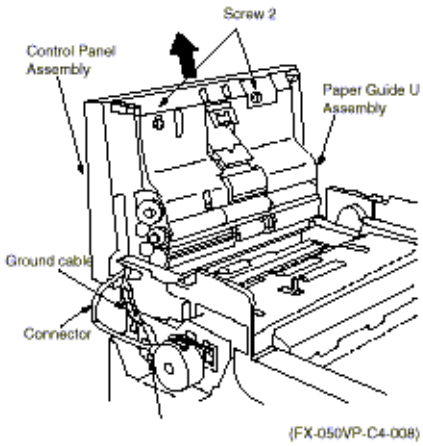

(FX-050VP-C4-008)

2) Control Panel Assembly

a) Remove the OPE Board by removing the 10 small screws 3 and the part of the fixing hooks (8).

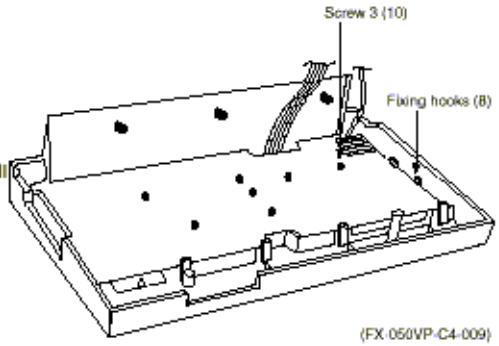

(FX-050VP-C4-009)

b) Remove the part of LED by removing the two screws 4.

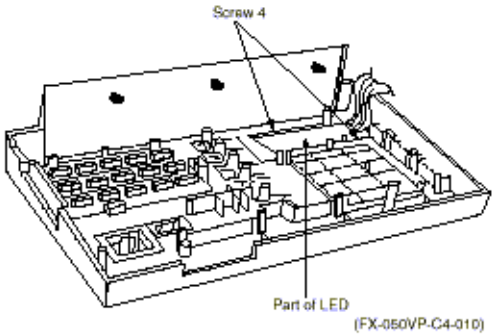

(FX-050VP-C4-010)

3) Paper guide (U) Assembly

a) Separation Rubber

a. The Separation Rubber can be removed from the Paper Guide (U) Assembly.

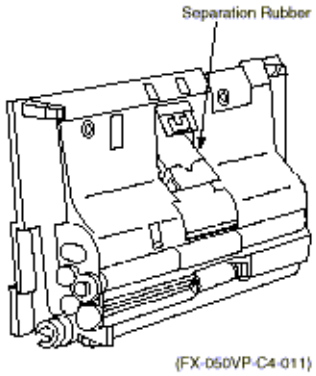

(FX-050VP-C4-011)

b) Feed Roller

a. Remove the ground cable by removing the two screws 5.

b. Remove the Feed Roller by removing the gear and ADF bearings.

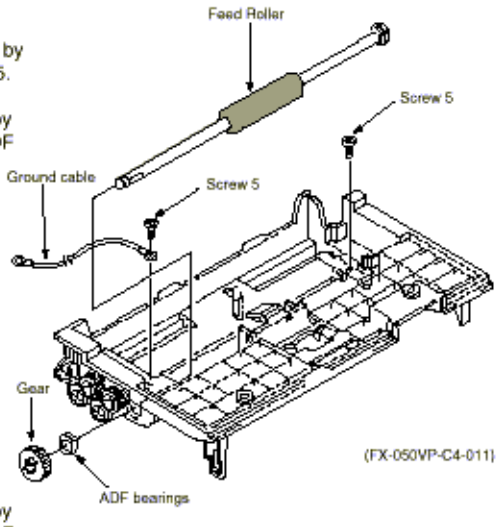

(FX-050VP-C4-011)

c) Scan Roller
Remove the Scan Roller by removing the gear and ADF bearing.

d) Exit Roller
Remove the Exit Roller while spreading and holding up the part of the fixing hooks.

Note: Be careful as not to break the shaft of the Exit Roller when removing.

(2) Reassembly procedure

Reverse the disassembly procedures.

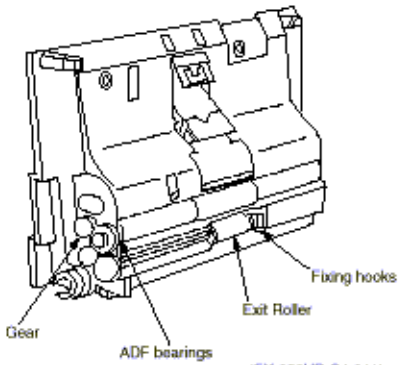

(FX-050VP-C4-011)

Copyright 1997, Okidata, Division of OKI America, Inc. All rights reserved. See the OKIDATA Business Partner Exchange (BPX) for any updates to this material. (http://bpx.okidata.com)

(1) Disassembly procedure

1) Scanner Unit

a) First, carry out the disassembly procedure up to the point of the 4.2.3.2 (Rear Cover and Main Cover) and 4.2.3.3 (Control Panel Assembly and Paper Guide (U) Assembly).

b) Disconnect the connector from the MCNT Board and the AC inlet from the scanner frame.

c) Remove the Scanner Unit by removing the three screws 1.

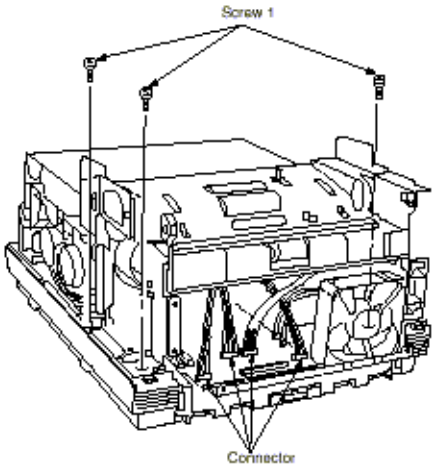

(FX-050VP-C4-013)

2) Scanner Motor

a) Remove the Scanner Motor by removing the two screws 2.

3) Scanner Frame

a) Remove the Scanner Frame by removing the three screws 3.

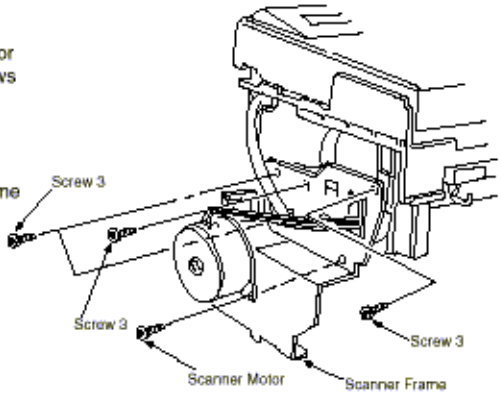

(FX-050VP-C4-014)

(FX-050VP-C4-014)

4) Sub-roller, ADF roller assembly, Pinch Roller, Contact Image Sensor

- Turn the Scanner Frame Assembly inside out and perform the disassembly procedure.

a) Remove the Bottom Plate by removing the three screws 4.

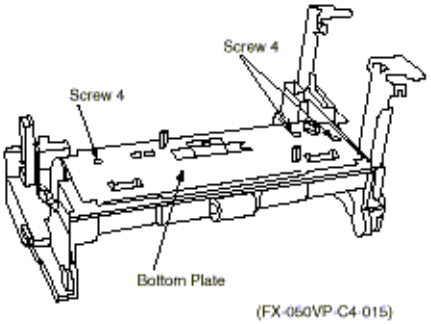

(FX-050VP-C4-015)

b) Remove the Sub-roller from the Scanner Frame.

c) Remove the spring 1 from the Scanner Frame.

d) Remove the ADF Roller Assembly by removing the gear on the Scanner Frame.

e) After removing the ADF Roller, remove the Pinch Roller by holding up the two springs 2 while the Pinch Roller Shaft is pushed and released.

f) Remove the Contact Image Sensor by disconnecting the connector.

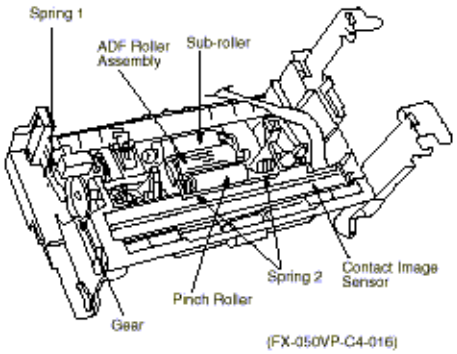

(FX-050VP-C4-016)

5) PC1, PC2

a) After disconnecting the two connectors, remove the photo-coupler sensors PC1 and PC2 on the Bottom Plate by pressing the latch using the flat screwdriver or the like.

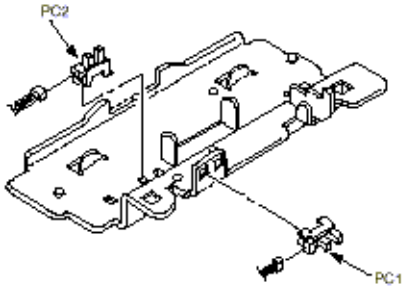

(FX-050VP-C4-017)

(2) Reassembly procedure

Reverse the disassembly procedure.

Copyright 1997, Okidata, Division of OKI America, Inc. All rights reserved. See the OKIDATA Business Partner Exchange (BPX) for any updates to this material. (http://bpx.okidata.com)

(1) Disassembly procedure

- First, carry out the disassembly procedure up to the point of the Scanner Unit Assembly removal (Refer to Sub-section 4.2.3.4.)

1) Resist Motor and Drum Motor

a) Remove the Resist Motor by removing the two screws 1.

b) Remove the Drum Motor by removing the two screws 2.

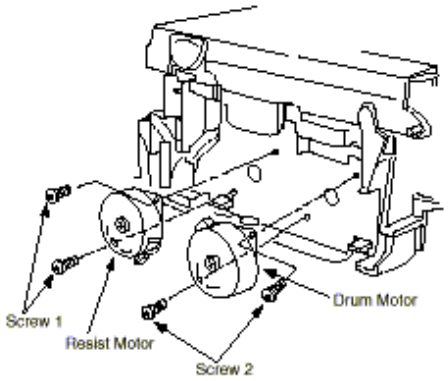

(FX-050VP-C4-018)

2) Release Guide Assembly

a) Remove the Release Guide Assembly by removing the Release Spring.

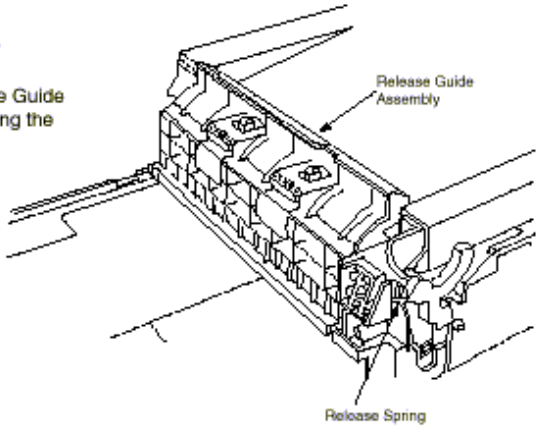

(FX-050VP-C4-019)

3) Stacker Cover

a) Disconnect the flat cable.

b) Remove the Copy Stacker by pressing inward the two latches on it from the two reset levers.

c) Remove the Copy Stacker by spreading it from the lower base.

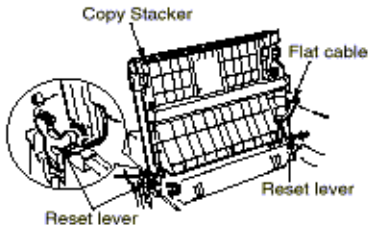

(FX050-C4-021)

4) Fusing Unit

a) Remove the Fusing Unit by removing the four screws 2.

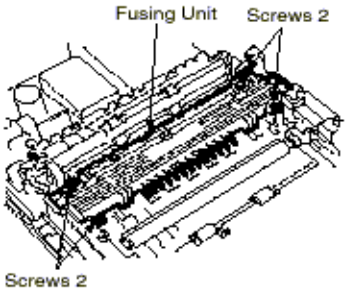

(FX050-C4-022)

5) Manual Feed Assembly

a) First, carry out the disassembly procedure up to the point of Main Cover removal. (Refer to sub-section 4.2.3.2)

b) Remove the Manual Feed Assembly by pressing inward the two retainers.

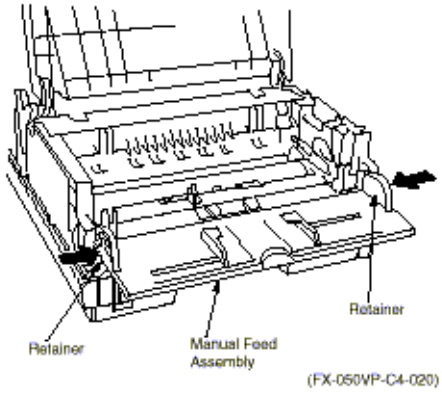

(FX-050VP-C4-020)

(2) Reassembly procedure

Reverse the disassembly procedures.

Copyright 1997, Okidata, Division of OKI America, Inc. All rights reserved. See the OKIDATA Business Partner Exchange (BPX) for any updates to this material. (http://bpx.okidata.com)

4.2.3.6 Lower Base, Motor Assembly, Back-up Roller, Transfer Roller

(1) Disassembly procedure

1) Lower Base, Motor Assembly

a) First, carry out the disassembly procedure up to the point of the Fusing Unit removal. (Refer to sub-item 4.2.3.5.)

b) Disconnect the two connectors (CN3 and CN4 on the MCNT board).

c) Remove the Lower Base by removing the seven screws 1 to 3.

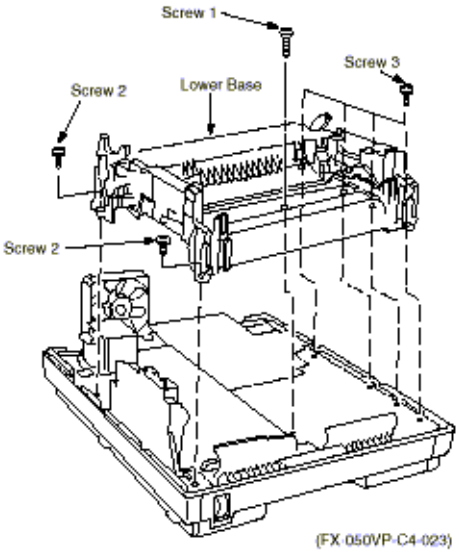

(FX 050VP-C4-023)

d) Press up and hold the two latches while removing the Motor Assembly out.

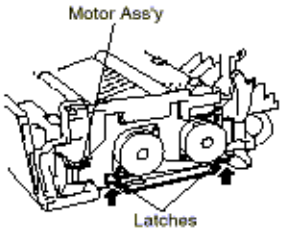

(FX050-C4-024)

2) Back-up Roller, Transfer Roller

a) After removing the Lower Base, remove the spring.

b) Lift the left side of the Back-up Roller and pull it out leftwards.

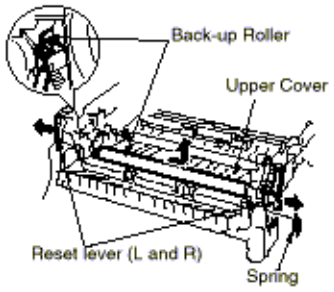

(FX050-C4-022)

c) Release the gear by unlocking the latch on the Lower Base.

d) Lift the right side of the Transfer Roller and shift rightwards, then pull it out from the Lower Base.

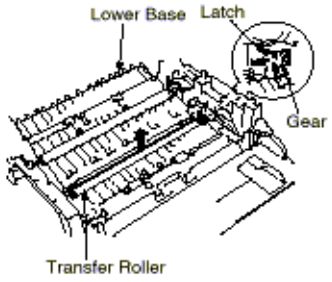

(FX050-C4-026)

(2) Reassembly procedure

Reverse the disassembly procedures.

Copyright 1997, Okidata, Division of OKI America, Inc. All rights reserved. See the OKIDATA Business Partner Exchange (BPX) for any updates to this material. (http://bpx.okidata.com)

(1) Disassembly procedure

1) Resist Roller, Hopping Roller

a) First, carry out the disassembly procedure up to the point of the Lower Base removal.
(Refer to sub-item 4.2.3.6.)

b) Remove the One-way Clutch Gear.

c) Press the Resist Roller to the right side and lift up the left side of it, then take off the Resist Roller.

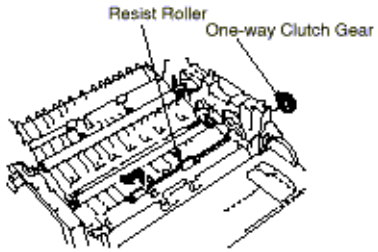

(FX050-C4-027)

d) Remove the One-way Clutch Gear and Bearing.

e) Remove the Hopping Roller by sliding to the right side.

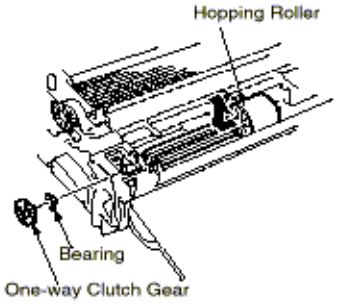

(FX050-C4-028)

2) Sensor Plates (Inlet, Outlet), Toner Sensor

a) After removing the Lower Base, remove the Sensor Plate by pressing and holding the latches while shifting the Sensor Plate up and out.

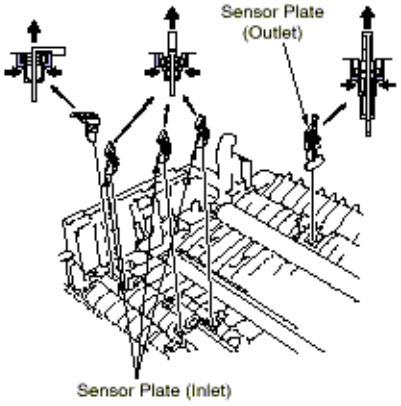

(FX050-C4-029)

b) Press and hold the Clutch while pushing the Toner Sensor up and out.

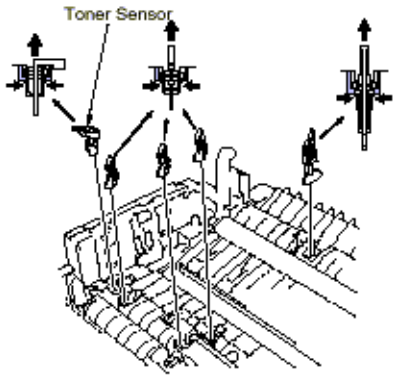

(FX050-C4-030)

(2) Reassembly procedure

Reverse the disassembly procedures.

Copyright 1997, Okidata, Division of OKI America, Inc. All rights reserved. See the OKIDATA Business Partner Exchange (BPX) for any updates to this material. (http://bpx.okidata.com)

(1) Disassembly procedure

- First, carry out the disassembly procedure up to the point of the Printer Unit removal. (Refer to sub-section 4.2.3.6.)

Note: MCNT board is shown below:

1) MCNT Board

a) Remove the MCNT Board by removing the five screws 2.

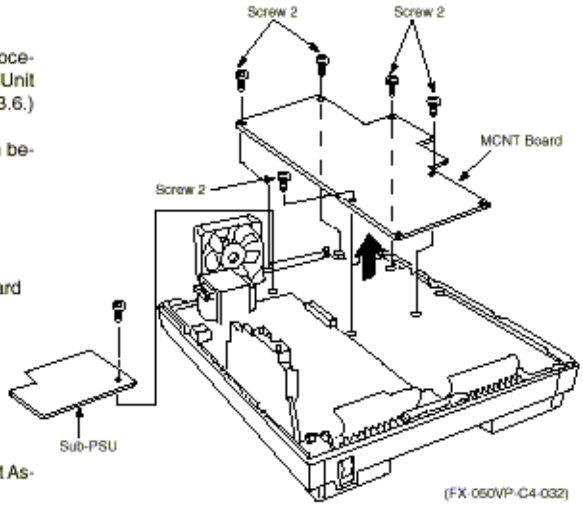

(FX-050VP-C4-032)

2) Power Supply Unit and Contact Assembly

a) Disconnect the two connectors from the Transformer.

b) Remove the Power Supply Unit by removing the three screws 3 and the screw 4.

c) Separate the Power Supply Unit from the Contact Assembly.

3) Transformer

a) Remove the Support Plate by removing the five screws 5.

b) Remove the Transformer by disconnecting the two connectors.

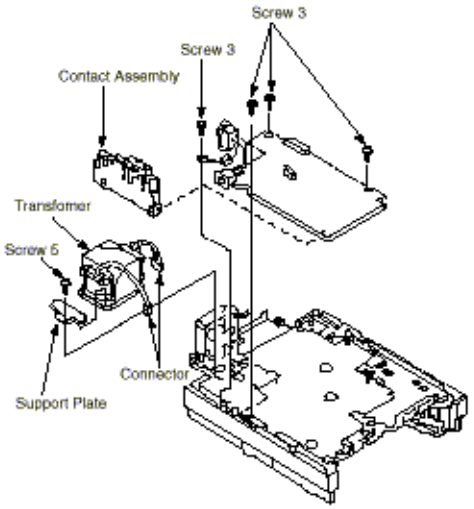

(FX-050VP-C4-033)

4) Sub-PSU

a) Remove 1 screw.

(2) Reassembly procedure

Reverse the disassembly procedures.

Copyright 1997, Okidata, Division of OKI America, Inc. All rights reserved. See the OKIDATA Business Partner Exchange (BPX) for any updates to this material. (http://bpx.okidata.com)

- Adjustment point: Technical Function No. 27.
- * To bring the LCD up to Technical Function, press SELECT FUNCTION key once, COPY key twice and "2" key (In case of no message in memory).

Note: When the rank marking of the replaced LED print head (new part) is the same as that of the used LED print head (old part), you do not always have to set the LED print head drive time.

Adjustment:

1) Turn AC power ON.

2) Setting of LED print head should be according to the Table 5.1.1 below:

Setting of Technical Function No. 27 (Table 5.1.1)

Setting / Rank Marking	MSB ↓ LSB																													
		0	0	0	0	0	0	0	0	0	0	0	0	0	0	0	1	1	1	1	1	1	1	1	1	1	1	1	1	1
		0	0	0	0	0	0	0	0	1	1	1	1	1	1	1	0	0	0	0	0	0	0	1	1	1	1	1	1	1
		0	0	0	0	1	1	1	1	0	0	0	0	1	1	1	1	0	0	0	0	1	1	1	1	0	0	0	0	1	1	1	1
		0	0	1	1	0	0	1	1	0	0	1	1	0	0	1	1	0	0	1	1	0	0	1	1	0	0	1	1	0	0	1	1
		0	1	0	1	0	1	0	1	0	1	0	1	0	1	0	1	0	1	0	1	0	1	0	1	0	1	0	1	0	1	0	1
291 – 313										*																							
269 – 290											*																						
248 – 268												*																					
229 – 247													*																				
212 – 228														*																			
196 – 211															*																		
181 – 195																*																	
168 – 180																	*																
155 – 167																		*															
143 – 154																			*														
132 – 142																				*													
122 – 131																					*												
113 – 121																						*											
105 – 112																							*										
100 – 104																								*									

Note:

The luminous intensity ranking is determined by the first, second and third digits from the right in the LED print head (i.e. in ---XX122, 122 is the luminous intensity ranking.)

This adjustment should be made whenever the main control board (R44 PCB) or LED Head are replaced.

In addition, this setting should be verified on initial unit install, or whenever firmware is updated.

Copyright 1997, Okidata, Division of OKI America, Inc. All rights reserved. See the OKIDATA Business

Partner Exchange (BPX) for any updates to this material. (http://bpx.okidata.com)

The clock frequency and power voltage of the machine are not possible to adjust in the field. However, their measurement procedures are described here for confirmation of clock frequency and each voltage.

1) Clock Frequency

- Measurement point: M17 board; LC2-3 pin and ground terminal
- Specification: 20.000 MHz ± 50 PPM

Note: If the counter does not read with 20.000 MHz, replace with a new crystal oscillator (X1).

2) +5V DC Voltage (SUB)

- Measurement point: M17 board; CN16-1 pin and ground terminal
- Specification: +5V ± 4% (+4.5V to 5.2V)

3) +5V DC Voltage

- Measurement point: M17 board; CN1-B12/A13/B13 pin and ground terminal
- Specification: +5V ± 4% (+4.5V to 5.2V)

4) +8V DC Voltage

- Measurement point: M17 board; CN1-A14 pin and ground terminal
- Specification: +6.5V to 15V

5) -8V DC Voltage

- Measurement point: M17 board; CN1-B14 pin and ground terminal
- Specification: -15V to -6.5V

6) +30V DC Voltage

- Measurement point: M17 board; CN1-A15/B15 pin and ground terminal
- Specification: +24V to +45V

7) Contact Image Sensor Output (SIG signal)

- Measurement point: M17 board; CN10-1 pin and ground terminal
- Specification: A waveform sample is shown below.
- Test chart: White sheet (A4 size)

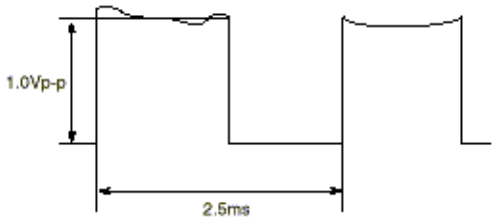

Copyright 1997, Okidata, Division of OKI America, Inc. All rights reserved. See the OKIDATA Business Partner Exchange (BPX) for any updates to this material. (http://bpx.okidata.com)

1) Turn AC power OFF.

2) Carry out the disassembly procedure up to Main Cover and Scanner Unit removal. (Refer to the Mechanical Disassembly and Reassembly in Chapter 4-2.)

3) Connect extension cables to the M17 board.

4) Connect the frequency counter (for clock frequency), digital voltmeter (for power voltage) and Oscilloscope (for SIG signal). See figure 5.3.1.

5) Turn AC power ON. Main power supply is set to "ON" (PC1 ON) by loading the document on the cover-top. (except +5V SUB)

6) Measurement

7) Turn AC power OFF.

8) Reverse the disassembly procedures.

Copyright 1997, Okidata, Division of OKI America, Inc. All rights reserved. See the OKIDATA Business Partner Exchange (BPX) for any updates to this material. (http://bpx.okidata.com)

OKIDATA®

Service Manual for OF5300/5600

Chapter 5 Adjustments

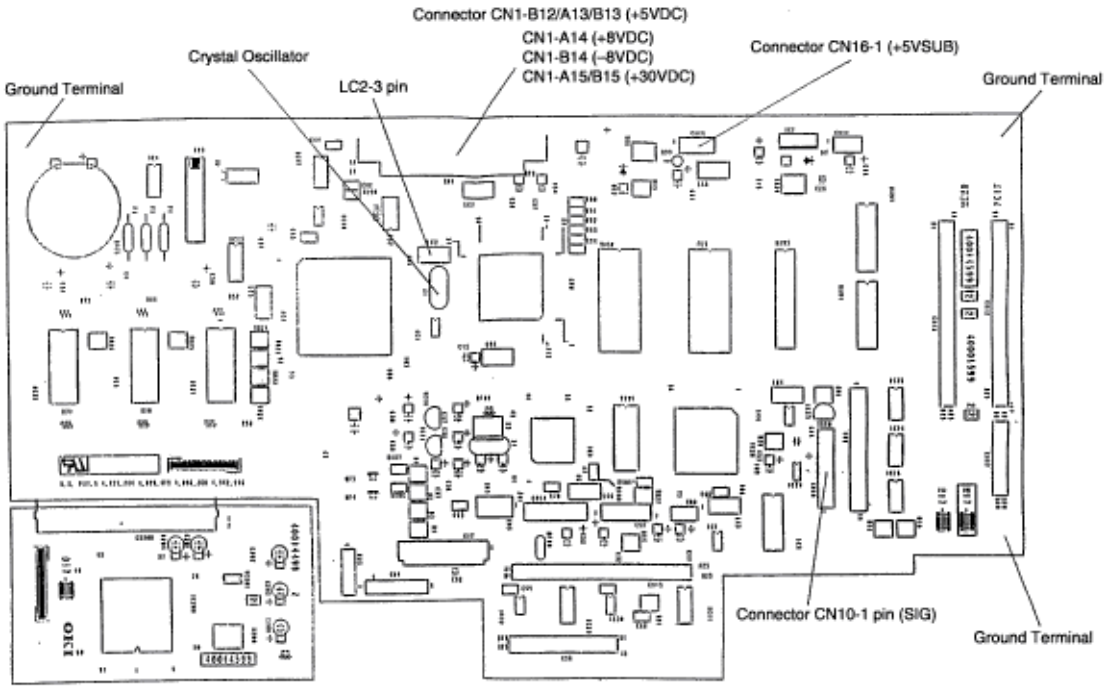

Copyright 1997, Okidata, Division of OKI America, Inc. All rights reserved. See the OKIDATA Business Partner Exchange (BPX) for any updates to this material. (http://bpx.okidata.com)

The user (or service personnel) is required to replace the following items as consumable parts.

User Replaceable Items Life

No.	Part name	Expected Use Before Replacement	Reference Item No. in Fig.6.1.1
1	Toner Cartridge	2500 sheets/cartridge (ITU-T document sample No.1) (second or later cartridge to a new I/D Unit) * The first toner cartridge installed in a new I/D unit will have a decreased yield.	(1)
2	I/D Unit (Image drum unit)	up to 20,000 sheets: per unit	(2)

Service Parts Life

No.	Part name	Expected Use Before Replacement	Reference Item No. in Fig.6.2.1
1	Fuser Unit	180,000 sheets	(3)
2	Separation Rubber	The Separation Rubber will not require replacement for at least 30,000 documents fed.	(4)

Copyright 1997, Okidata, Division of OKI America, Inc. All rights reserved. See the OKIDATA Business Partner Exchange (BPX) for any updates to this material. (http://bpx.okidata.com)

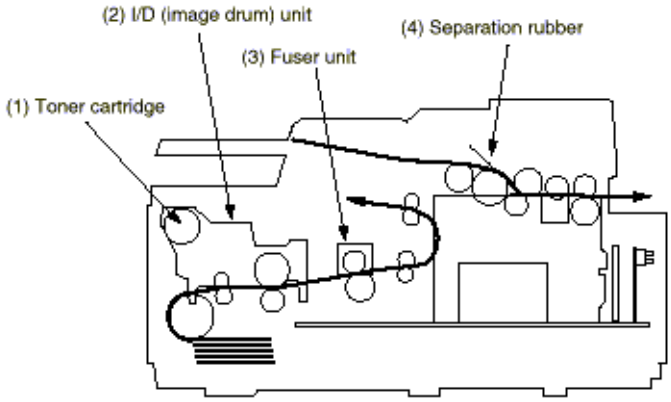

Copyright 1997, Okidata, Division of OKI America, Inc. All rights reserved. See the OKIDATA Business Partner Exchange (BPX) for any updates to this material. (http://bpx.okidata.com)

No.	Item	Specifications
1	Document feeder	Jam occurrence and misfeeds in the automatic document feeder will be less than one in 500 operations for all specified documents.
2	Recording paper feeder	Jam occurrence in the automatic paper feeder will be less than one in 1,500 operations and misfeeds will be less than one in 500 operations for all specified recording paper.
3	Battery	The life of the battery is five years. Battery maintains system time and date during power outage ONLY. It is a lithium battery. It is not rechargeable.
4	MTBF	The MTBF for the overall machine will exceed 3,000 hours of actual operation. The MTBF will be measured at a confidence level of 95% under controlled laboratory conditions. The MTBF will be based on 50% transmit and 50% receive activities.

Copyright 1997, Okidata, Division of OKI America, Inc. All rights reserved. See the OKIDATA Business Partner Exchange (BPX) for any updates to this material. (http://bpx.okidata.com)

The recommended preventative maintenance of the following items should be performed twice a year (once a year is the absolute minimum) after the machine is installed. Table 6.2.2 describes the preventative maintenance procedures.

Copyright 1997, Okidata, Division of OKI America, Inc. All rights reserved. See the OKIDATA Business Partner Exchange (BPX) for any updates to this material. (http://bpx.okidata.com)

No.	Part name	Maintenance Procedure	Reference Item No. in Fig.6.2.2
1	Scan Roller	Clean with water.	(1)
2	Feed Rollers No. 1 and No. 2	Clean with water. If the surface of these rollers becomes dirty and the dirt causes the transmitted image or the local copied image to expand vertically, perform this cleaning.	(2)
3	Sub Roller	Clean with water.	(3)
4	Pinch Rollers	Clean with ethyl alcohol.	(4)
5	ADF Roller	Clean with water. If the surface of this roller becomes dirty and the dirt causes misfeeding of documents, perform this cleaning.	(5)
6	Contact Image Sensor	Check for accumulation of paper dust, etc. Clean with ethyl alcohol if necessary.	(6)
7	Separation Rubber	Clean with water. If this rubber is worn out, replace it. (once a year)	(7)
8	LED print head	Clean the surface of the LED head by using a soft, lint-free cloth. Move the cloth back and forth across the head several times, using a clean portion of the cloth with each pass.	(8)
9	Printer unit	Clean the inside of the printer unit by using a cloth dampened with cold water.	
10	Lubrication	Apply silicone oil to the following parts: a. Gears (once year)	
11	Cleaning	Remove any foreign materials that may have fallen into the machine from outside.	

Copyright 1997, Okidata, Division of OKI America, Inc. All rights reserved. See the OKIDATA Business Partner Exchange (BPX) for any updates to this material. (http://bpx.okidata.com)

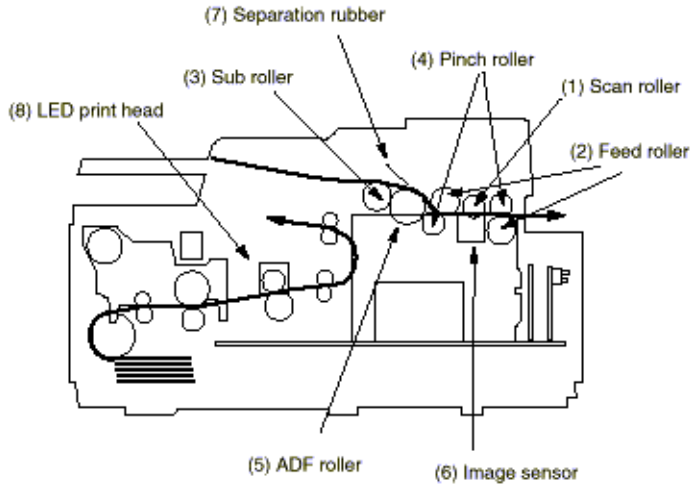

Copyright 1997, Okidata, Division of OKI America, Inc. All rights reserved. See the OKIDATA Business Partner Exchange (BPX) for any updates to this material. (http://bpx.okidata.com)

1. Purpose

A user can clear the image drum counter and also check some of the other counters (such as the print counter, scan counter) by using the <--- key or ---> key.

2. Procedure

The following example shows the menu flow when the service bit has been set **OFF.**

Operations:

- To begin, press SELECT FUNCTION key once and one-touch key No.7 in the standby mode. (with no message in the memory)
- Press ← key or → key.

The display shows:

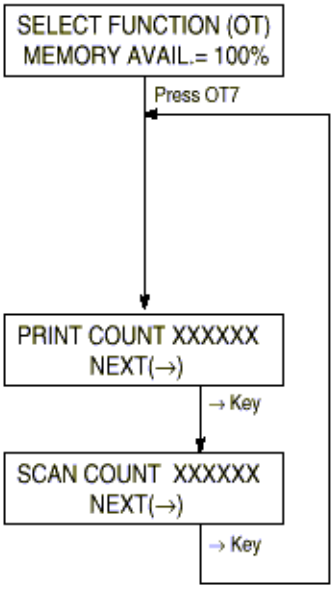

Note: Clear Operation

After the drum counter is cleared, the warning message will disappear.

Copyright 1997, Okidata, Division of OKI America, Inc. All rights reserved. See the OKIDATA Business Partner Exchange (BPX) for any updates to this material. (http://bpx.okidata.com)

1. Purpose

The service personnel can clear and check the following counters.

- Image Drum
- Toner
- Image Drum (Total)
- Print
- Scan

Note: DRUM (T) count is used to display the total in-use life of the machine. This counter cannot be cleared.

2. Procedure

The following example shows the menu flow when the service bit has been set ON.

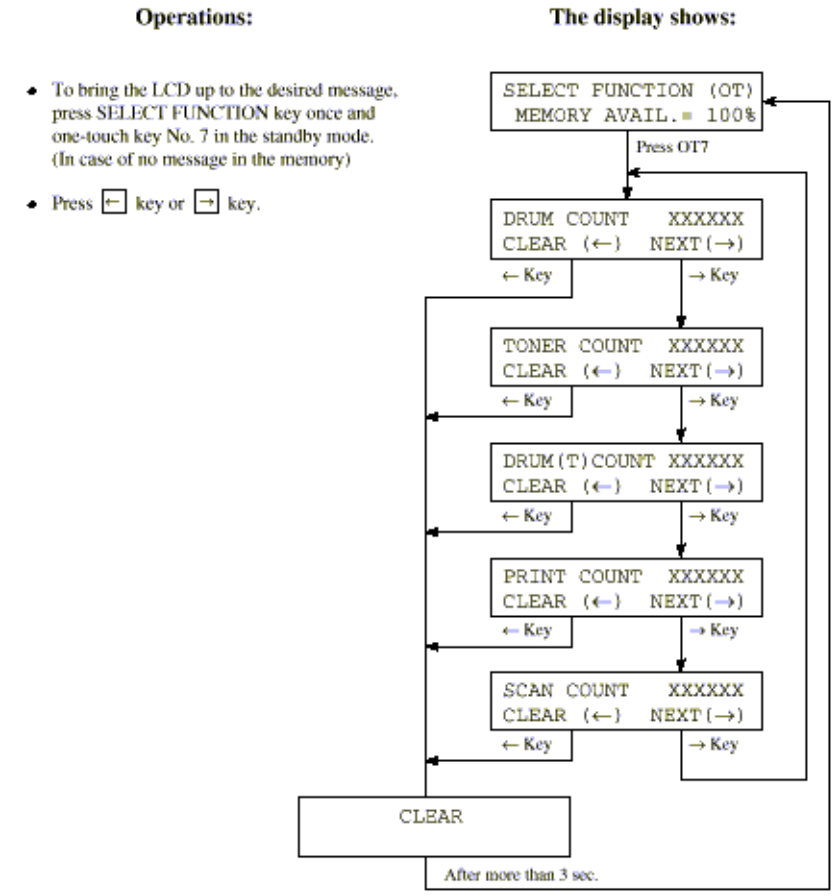

Copyright 1997, Okidata, Division of OKI America, Inc. All rights reserved. See the OKIDATA Business Partner Exchange (BPX) for any updates to this material. (http://bpx.okidata.com)

1. **Purpose**
   To check ROMs, RAMs and printing function.

2. **Procedure**

Operations:	The display shows:
• To begin, press SELECT FUNCTION key once and COPY key twice in the standby mode. (With no message in the memory)	TECH. PROGRAMMING YES(←/1-4) NO(→)
• Press ← key.	1:LOCAL TEST YES(←) NO(→/1-4)
• Press ← key.	1:SELF DIAGNOSIS YES(←) NO(→/1-8)
• Press ← key to activate self-diagnosis.	CPU PROG1 PROG2 XXXX XXXX XXXX (Display for 3 second)
(Figure 6.5.1 shows the printed data.)	1:SELF DIAGNOSIS EXCUTING
	1:SELF DIAGNOSIS PRINTING
	(Self diagnosis data is printing.)

Copyright 1997, Okidata, Division of OKI America, Inc. All rights reserved. See the OKIDATA Business Partner Exchange (BPX) for any updates to this material. (http://bpx.okidata.com)

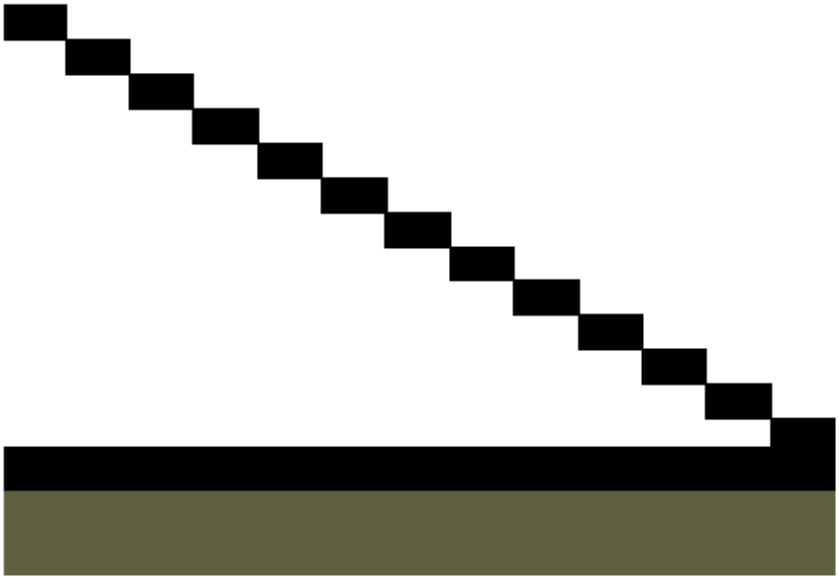

```
    CPU-ROM   VERSION  AA00
              HASH     OK   DACD
    CPU-RAM            OK
    PROG1     VERSION  AA00
    PROG1     HASH     OK   3142
    PROG2     VERSION  AA00
    PROG2     HASH     OK   1234

    LANGUAGE  VERSION  LL10
              HASH     OK   3F06
    DEFAULT   VERSION  DD10
              HASH     OK   A683
*1  RAM1               1M   OK
*2  RAM2               OK
*3  OPT-RAM1           1M   OK
*3  OPT-I/F            PARALLEL
    DEFAULT TYPE       01   07/01/96


*1 marked item is shown for condition of all RAM except EXCEED RAM.
*2 marked item is shown to SRAM for EXCEED.
*3 marked items are option.
```

Copyright 1997, Okidata, Division of OKI America, Inc. All rights reserved. See the OKIDATA Business Partner Exchange (BPX) for any updates to this material. (http://bpx.okidata.com)

a) Pattern 1 All white (32 lines)

b) Pattern 2 Stair pattern (32 lines in each step)

c) Pattern 3 All black (32 lines)

d) Pattern 4 Alternate printing of black dots and white dots (32 lines x 2)

e) Pattern 5 All white (32 lines)

f) CPU-ROM VERSION

CPU-ROM	In case CPU-ROM is good.	HASH OK
	In case CPU-ROM is not good.	HASH NG
CPU-RAM	In case CPU-RAM is good.	OK
	In case CPU-RAM is not good.	NG

g) PROG1 VERSION

PROG1	In case PROG1 is good.	HASH OK
	In case PROG1 is not good.	HASH NG

h) PROG2 VERSION

PROG2	In case PROG2 is good.	HASH OK

i) LANGUAGE VERSION

LANGUAGE	In case LANGUAGE is good.	HASH OK
	In case LANGUAGE is not good.	HASH NG

j) DEFAULT VERSION

DEFAULT	In case DEFAULT is good.	HASH OK
	In case DEFAULT is not good.	HASH NG

k) RAM1	In case RAMi is good.	OK
	In case RAMi is not good.	NG
	("1" is RAM's number)	
l) OPT-RAM1	In case OPT-RAM1 is good.	OK
	In case OPT-RAM1 is not good.	NG
m) OPT-I/F	In case OPT-I/F is good.	PARALLEL
	In case OPT-I/F is not good.	(ALL BLANK)

- Figure 6.5.1 shows a printed sample.

NG = No Good

Copyright 1997, Okidata, Division of OKI America, Inc. All rights reserved. See the OKIDATA Business Partner Exchange (BPX) for any updates to this material. (http://bpx.okidata.com)

1. Purpose

To adjust the linearity of the contact image sensor output levels.

NOTE:

After adjusting the levels, check the copy quality of the unit.
Using the unit, make copies of test charts or known good documents.

Operations:	The display shows:
• To begin, press SELECT FUNCTION key once and COPY key twice in the standby mode. (with no message in the memory)	TECH. PROGRAMMING ? YES(←/1-4) NO(→)
• Press ← key.	1:LOCAL TEST YES(←) NO(→/1-4)
• Press ← key.	1:SELF DAIGNOSIS YES(←) NO(→/1-8) →
	To SENSOR CALIBRATION

Operations: **The display shows:**

- Enter "2".
- Press ← key.
- Load document(s).
  For adjustment of levels, use white plain bond paper(s) of NA Letter size.
- Press ← key.
- Observe and check the document feed operation.
  Check that the followings do not occur:
  - Document skew.
  - Multiple document feeding.
  - No feeding.

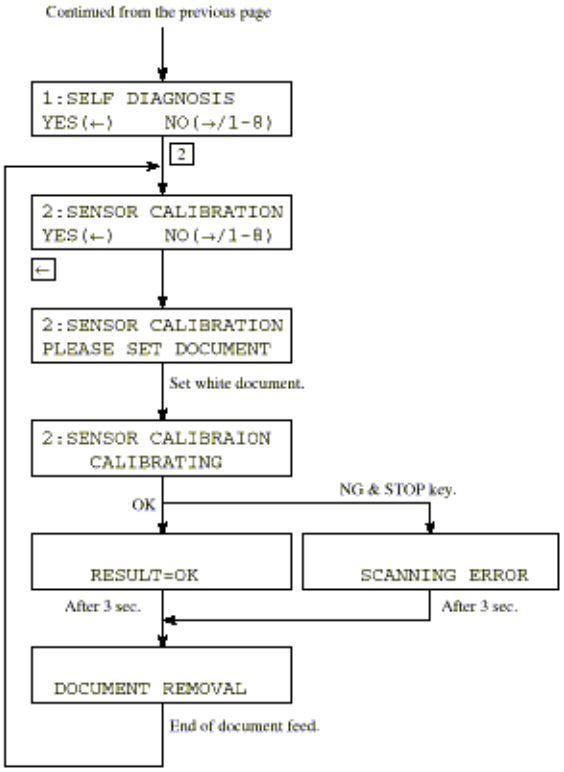

NOTE:

After performing the adjustment, make copies of test charts or known good documents. Compare the copies to the originals to evaluate the copy print quality.

Copyright 1997, Okidata, Division of OKI America, Inc. All rights reserved. See the OKIDATA Business Partner Exchange (BPX) for any updates to this material. (http://bpx.okidata.com)

1. **Purpose**
   To check the operation of the LEDs on the operator panel.

2. **Procedure**

Operations:	The display shows:
• To begin, press SELECT FUNCTION once and COPY key twice in the standby mode. (with no message in memory)	TECH. PROGRAMMING ? YES(←/1-4) NO(→)
	↵
• Press ↵ key.	1:LOCAL TEST YES(←) NO(→/1-4)
	↵
• Press ↵ key.	1:SELF DIAGNOSIS YES(←) NO(→/1-8)
• Enter "3".	3
	3:LED TEST YES(←) NO(→/1-8)
	↵
• Press ↵ key.	3:LED TEST TESTING

• Observe and check that LEDs are blinking.
- All LEDs will be sequentially turned on for one second in the following order.

(Start)

→ ALARM → DARK → NORMAL → LIGHT → STD → FINE
all LED off ← all LED on ← PHOTO ← EX.FINE ← 1 second interval.

• To end the test, press STOP key.

Copyright 1997, Okidata, Division of OKI America, Inc. All rights reserved. See the OKIDATA Business Partner Exchange (BPX) for any updates to this material. (http://bpx.okidata.com)

1. **Purpose**
   To send the G3 tonal frequencies to the line.

2. **Procedure**

Operations:

- To begin, press SELECT FUNCTION key once, COPY key twice and ← key twice. (with no message in memory)
- Enter "4".
- Press ← key.
- After the checking, press STOP key or end of the transmission.

The display shows:

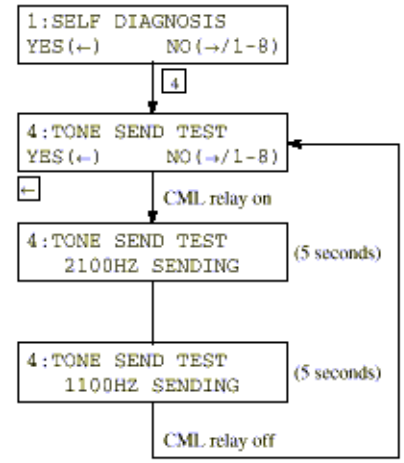

*1: When the display indicates "2100Hz or 1100Hz SENDING", you may extend the tone send test for 30 more seconds by pressing the START key.

Copyright 1997, Okidata, Division of OKI America, Inc. All rights reserved. See the OKIDATA Business Partner Exchange (BPX) for any updates to this material. (http://bpx.okidata.com)

NOTE:

This procedure requires coordination with technical staff at the remote location.

In addition, both locations must have a telephone handset connected to each machine.

1. Purpose

To check the telephone line quality in combination with a remote station programmed to the high-speed modem receive test mode.

2. Procedure

Operations:

- To begin, press SELECT FUNCTION key once, COPY key twice and ← key twice. (with no message in memory)
- Enter "5".
- Press ← key.
- Set MODEM rate by → key.
- Press ← key.
  All zero data will be continuously sent.
- After the test, press STOP key.

The display shows:

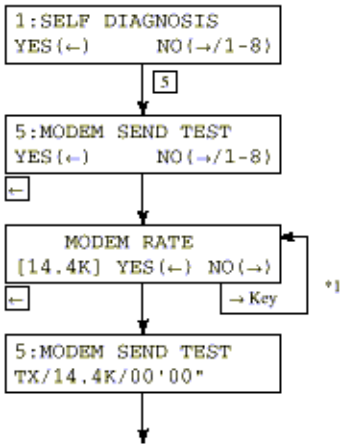

(For detail, see Fig. 6.9.1)

*1: → 33.6K (OKIFAX 5500/5600) → 28.8K (OKIFAX 5500/5600) → 14.4K → 12.0K → 9.6KT (V.17) →
← 0.3K ← 2.4K ← 4.8K ← 7.2K (V.29) ← 9.6K (V.29) ← 7.2KT (V.17) ←

33.6K and 28.8K are skipped for the MODEM without 33.6/28.8K bps function.

Copyright 1997, Okidata, Division of OKI America, Inc. All rights reserved. See the OKIDATA Business Partner Exchange (BPX) for any updates to this material. (http://bpx.okidata.com)

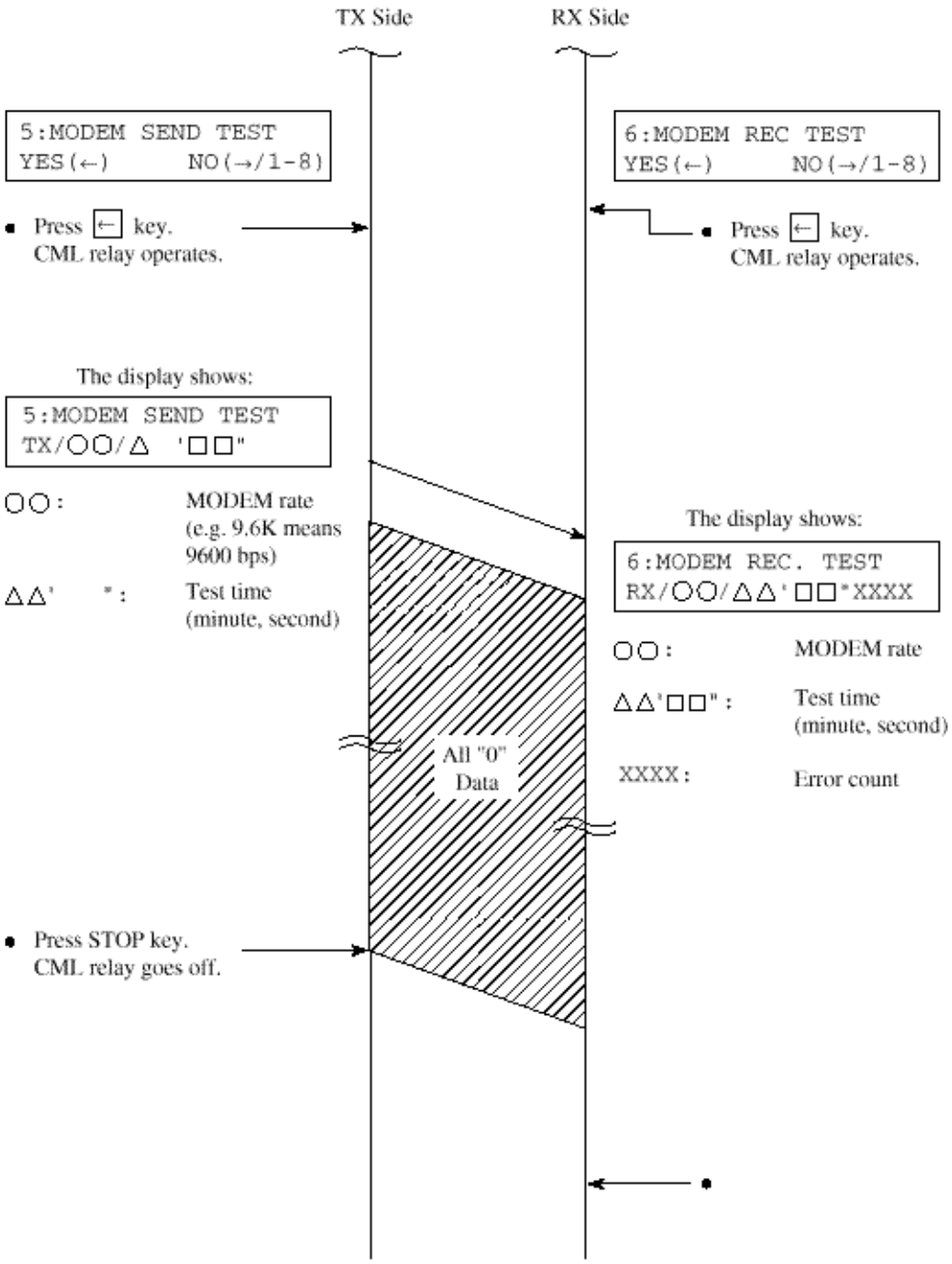

Copyright 1997, Okidata, Division of OKI America, Inc. All rights reserved. See the OKIDATA Business Partner Exchange (BPX) for any updates to this material. (http://bpx.okidata.com)

NOTE:

This procedure requires coordination with technical staff at the remote location.

In addition, both locations must have a telephone handset connected to each machine.

1. Purpose

To check the telephone line quality in combination with a remote station programmed to the high-speed modem send test mode.

2. Procedure

Operations:

- To begin, press SELECT FUNCTION key once, COPY key twice and ← key twice. (with no message in memory)
- Enter 6.
- Press ← key.
- Set MODEM rate by → key.
- Press ← key.
- After the test, press STOP key.

The display shows:

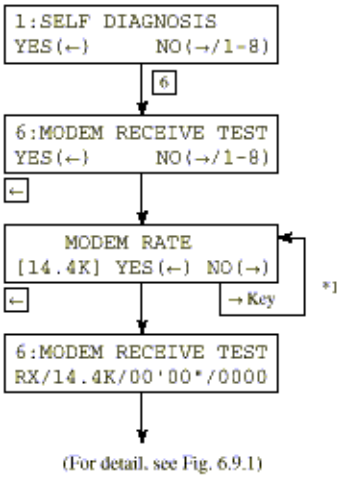

(For detail, see Fig. 6.9.1)

*1: → 14.4K → 12.0K → 9.6KT (V.17) → 7.2KT (V.17) → 9.6K (V.29) → 7.2K (V.29) → 4.8K → 2.4K →

Copyright 1997, Okidata, Division of OKI America, Inc. All rights reserved. See the OKIDATA Business Partner Exchange (BPX) for any updates to this material. (http://bpx.okidata.com)

1. Purpose

To send the multi-frequencies of tone dialing to the line.

2. Procedure

Operations:	The display shows:
• To begin, press SELECT FUNCTION key once, COPY key twice and ← key twice. (with no message in memory)	1:SELF DIAGNOSIS YES(←) NO(→/1-8)
• Enter 7.	[7] 7:MF(TONE) SEND TEST YES(←) NO(→/1-8)
• Press ← key.	[←] PRESS 1-#
• Press 1, 2, 3, 4, 5, 6, 7, 8, 9, 0, * or # key. MF tone corresponding to the key pressed will be sent until the next key is pressed.	
• After the test, press STOP key.	

Frequencies of MF tones are as follows:

1	697 Hz/1209 Hz
2	697 Hz/1366 Hz
3	697 Hz/1477 Hz
4	770 Hz/1209 Hz
5	770 Hz/1366 Hz
6	770 Hz/1477 Hz
7	852 Hz/1209 Hz
8	852 Hz/1366 Hz
9	852 Hz/1477 Hz
0	941 Hz/1366 Hz
*	941 Hz/1209 Hz
#	941 Hz/1477 Hz

Copyright 1997, Okidata, Division of OKI America, Inc. All rights reserved. See the OKIDATA Business Partner Exchange (BPX) for any updates to this material. (http://bpx.okidata.com)

1. **Purpose**
   To check the pseudo-ring back tone of TEL/FAX automatic switching.

2. **Procedure**

Operations:	The display shows:
• To begin, press SELECT FUNCTION key once, COPY key twice and ← key twice. (with no message in memory)	1:SELF DIAGNOSIS YES(←) NO(→/1-8)
• Enter 8.	[8] 8:TONE(TEL/FAX) TEST YES(←) NO(→/1-8)
• Press ← key.	[←] 8:TONE(TEL/FAX) TEST TONE SENDING
• After the test, press STOP key.	

Copyright 1997, Okidata, Division of OKI America, Inc. All rights reserved. See the OKIDATA Business Partner Exchange (BPX) for any updates to this material. (http://bpx.okidata.com)

NOTE:

Technical Function 1 (Service Bit) must be set to ON to print the Protocol Data Dump.

1. **Purpose**
   To analyze the transmitted/received G3 protocol signals.

2. **Procedure**

   - Manual printout of the last communication.

   (a) Manual printout

Operations:	The display shows:
• **Verify that Technical Function 1 (Service Bit) is set to ON.** Then, press SELECT FUNCTION key.	14:14 [FAX] [FUNCTION] (Standby)
• Press one-touch key No.6	SELECT FUNCTION (OT) MEMORY AVAIL.=100% [OT6]
• Enter 5.	1:ACTIVITY REPORT YES(←) NO(→/1-5) [5]
• Press [←] key.	5:PROTOCOL DUMP YES(←) NO(→/1-5) [←]
	PROTOCOL DUMP PRINTING
	(Printing)

Copyright 1997, Okidata, Division of OKI America, Inc. All rights reserved. See the OKIDATA Business Partner Exchange (BPX) for any updates to this material. (http://bpx.okidata.com)

Sample is from the transmitter side.

PROTOCOL DUMP

07/01/96 09:21
ID=OKI SHIBAURA

DATE	TIME	S,R-TIME	DISTANT STATION ID	MODE	PAGES	RESULT	
07/01	09:16	00'46"	OKI HONJO	CALLING	01	OK	0000

FCF

TX		C2 C4	FD F4	DF
RX	04 02 01	21	31	

TX	
RX	

TX
DIS
00 00 00 00 00 00 00
DTC
00 00 00 00 00 00 00
DCS
00 00 00 00 00 00 00 00 00
NSF
00 00 00 00 00 00 00 00

Copyright 1997, Okidata, Division of OKI America, Inc. All rights reserved. See the OKIDATA Business Partner Exchange (BPX) for any updates to this material. (http://bpx.okidata.com)

The printed out data permits to analyze G3 facsimile communication protocol signals between two facsimile machines. Figure 6.13.2 shows the result of an analysis on the printed data referring to Figure 6.13.1 (Protocol Data Dump).

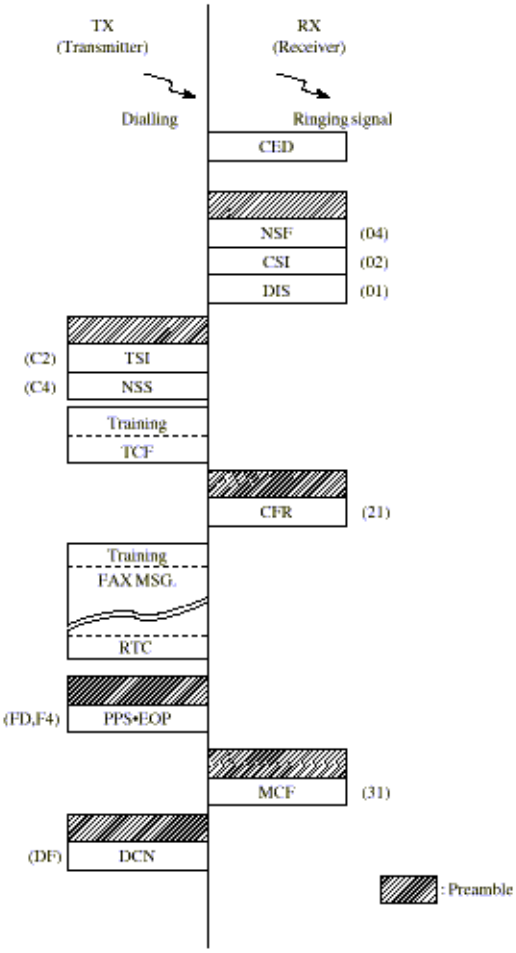

Copyright 1997, Okidata, Division of OKI America, Inc. All rights reserved. See the OKIDATA Business Partner Exchange (BPX) for any updates to this material. (http://bpx.okidata.com)

Table 6.14.1 shows all Facsimile Control Field (FCF) signals which are needed to analyze the printed out protocol dump data.

Some signals have two different hexadecimal codes in accordance with the calling party or called party.

Abbreviation	Hex. Codes	Description of Function
NSF	04	Non-Standard Facilities
CSI	02	Called Subscriber Identification
DIS	01	Digital Identification Signal
NSC	84	Non-Standard Facilities Command
CIG	82	Calling Subscriber Identification
DTC	81	Digital Transmit Command
NSS	44 C4	Non-Standard Set-Up
TSI	42 C2	Transmitting Subscriber Identification
DCS	41 C1	Digital Command Signal
CFR	21 A1	Confirmation to Receive
MCF	31 B1	Message Confirmation
FTT	22 A2	Failure to Train
MPS	72 F2	Multi-Page Signal
EOM	71 F1	End of Message
EPO	74 F4	End of Procedure
RTP	33 B3	Retain Positive
RTN	32 B2	Retrain Negative
PIP	35 B5	Procedure Interrupt Positive
PIN	34 B4	Procedure Interrupt Negative
PRI-MPS	7A FA	Procedure Interrupt-MPS
PRI-EOM	79 F9	Procedure Interrupt-EOM
PRI-EOP	7C FC	Procedure Interrupt-EOP
DCN	5F DF	Disconnect
ECM		Error Correction Mode
CRP	58 D8	Command Repeat
CTC	48 C8	Continue to Correct
CTR	23 A3	Response to Continue to Correct
EOR	73 F3	End of Retransmission
ERR	38 B8	Response to End of Retransmission
FCD	60	Facsimile Coded Data
PPS	7D FD	Partial Page Signal
PPR	3D BD	Partial Page Request
RCP	61	Return to control for Partial Page
RNR	37 B7	Receiver not Ready
RR	76 F6	Receiver Ready

Copyright 1997, Okidata, Division of OKI America, Inc. All rights reserved. See the OKIDATA Business Partner Exchange (BPX) for any updates to this material. (http://bpx.okidata.com)

This chapter contains:

(a) Troubleshooting flow charts related to general operations

(b) Troubleshooting flow charts by test operations

(c) Troubleshooting flow charts placing an emphasis on mechanical portions

Section No.	Name of Flow Chart	(a)	(b)	(c)
7.1.1	Overall troubleshooting flow chart	X	X	
7.1.2	No LCD operation	X		
7.1.3	ALARM LED on	X		
7.1.4	Printing test failure	X	X	
7.1.5	No local copy	X	X	
7.1.6	Auto dial failure	X		
7.1.7	Transmission problem	X		
7.1.8	Auto reception failure	X		
7.1.9	Reception problem	X		
7.1.10	Sensor calibration test		X	
7.1.11	LED test		X	
7.1.12	Tone send test		X	
7.1.13	High-speed modem test		X	
7.1.14	MF (Tone) send test		X	
7.1.15	Tone (TEL/FAX) send test		X	
7.1.16	No acoustic line monitor	X		
7.1.17	Power supply unit	X		
7.1.18	No document feeding			X
7.1.19	Multiple document feeding			X
7.1.20	Document skew			X
7.1.21	Document jam			X
7.1.22	Printer unit			

Copyright 1997, Okidata, Division of OKI America, Inc. All rights reserved. See the OKIDATA Business Partner Exchange (BPX) for any updates to this material. (http://bpx.okidata.com)

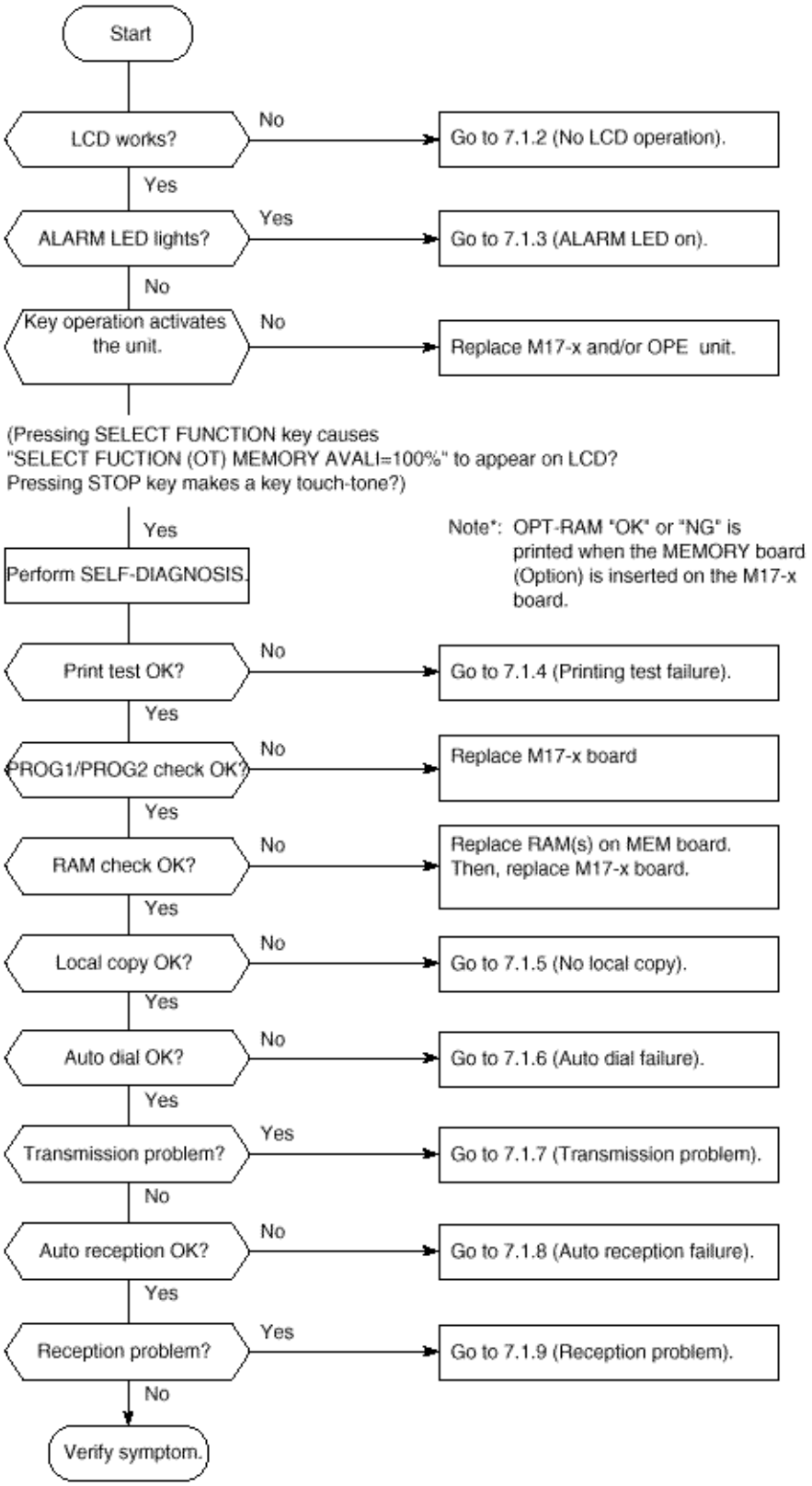

Copyright 1997, Okidata, Division of OKI America, Inc. All rights reserved. See the OKIDATA Business

Partner Exchange (BPX) for any updates to this material. (http://bpx.okidata.com)

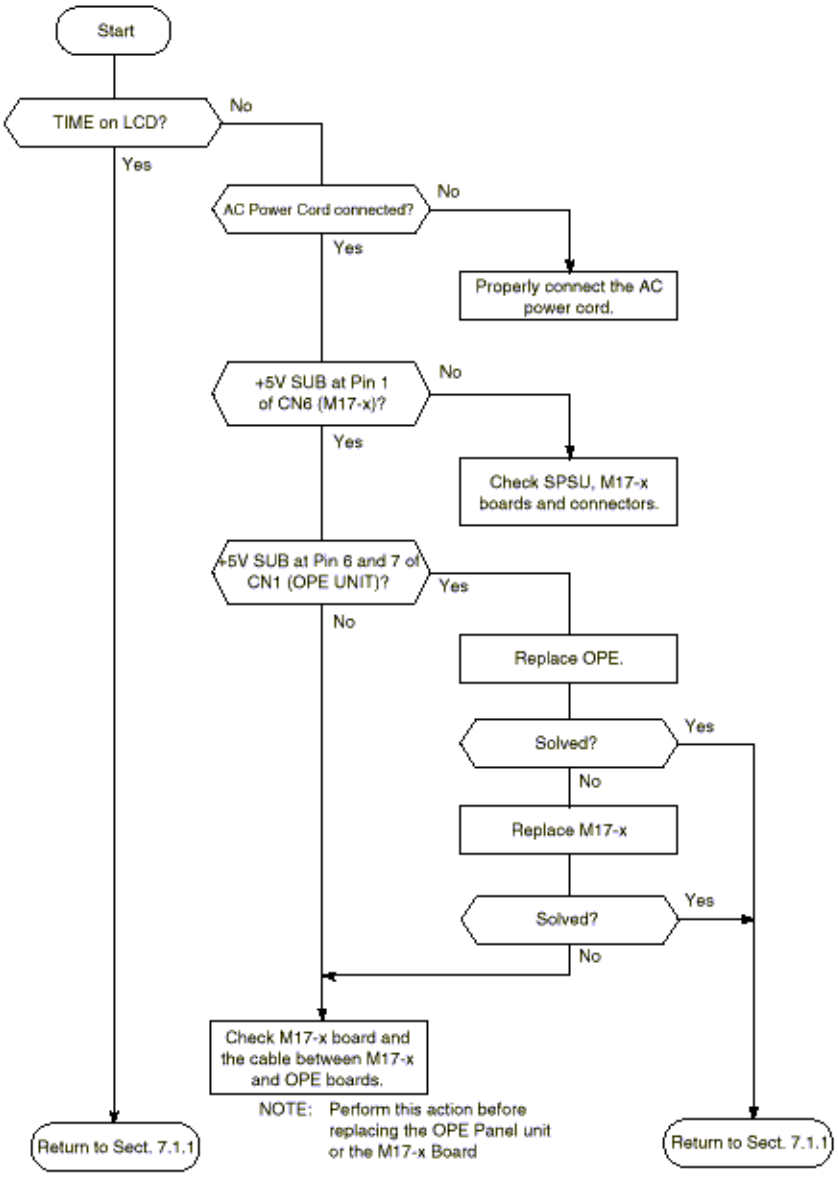

Copyright 1997, Okidata, Division of OKI America, Inc. All rights reserved. See the OKIDATA Business Partner Exchange (BPX) for any updates to this material. (http://bpx.okidata.com)

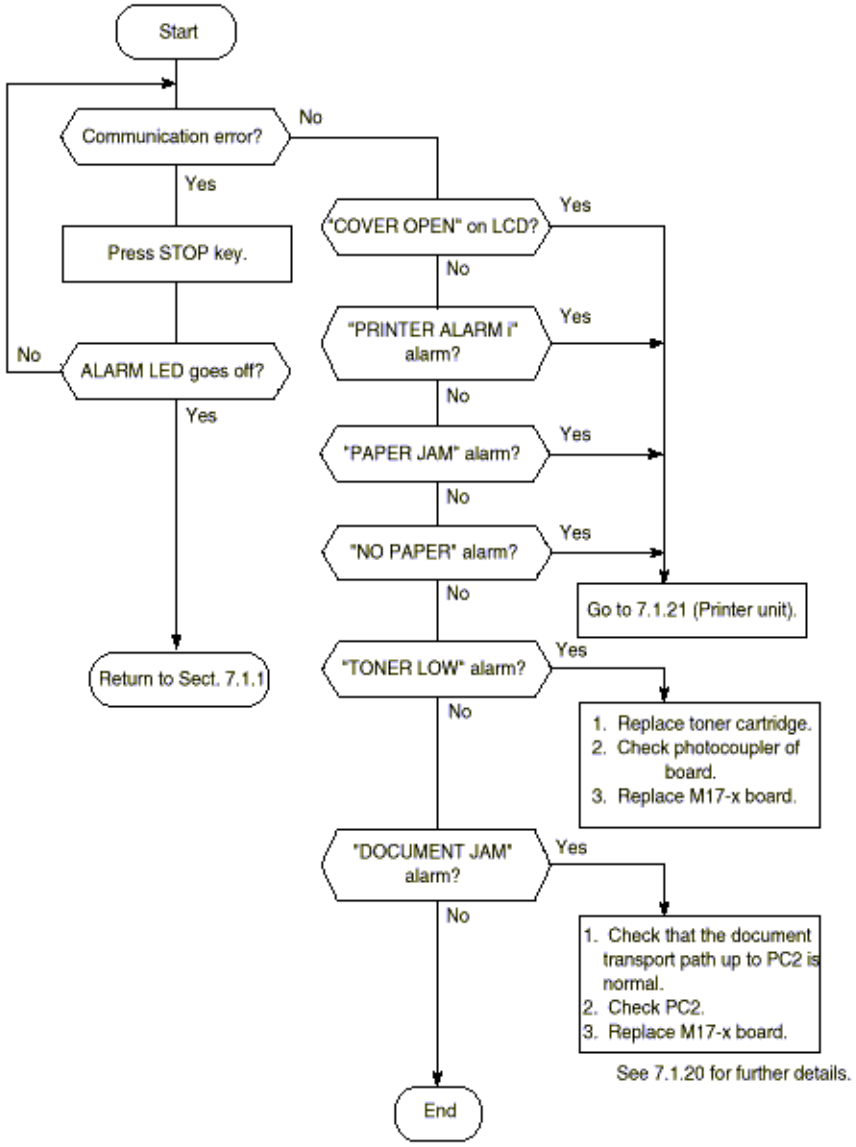

Note*: "PRINTER ALARM i" will be shown as follows: PRINTER ALARM 1 to PRINTER ALARM 4.

Copyright 1997, Okidata, Division of OKI America, Inc. All rights reserved. See the OKIDATA Business Partner Exchange (BPX) for any updates to this material. (http://bpx.okidata.com)

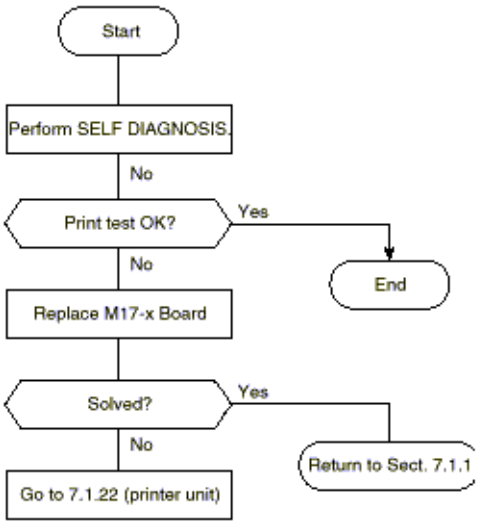

Copyright 1997, Okidata, Division of OKI America, Inc. All rights reserved. See the OKIDATA Business Partner Exchange (BPX) for any updates to this material. (http://bpx.okidata.com)

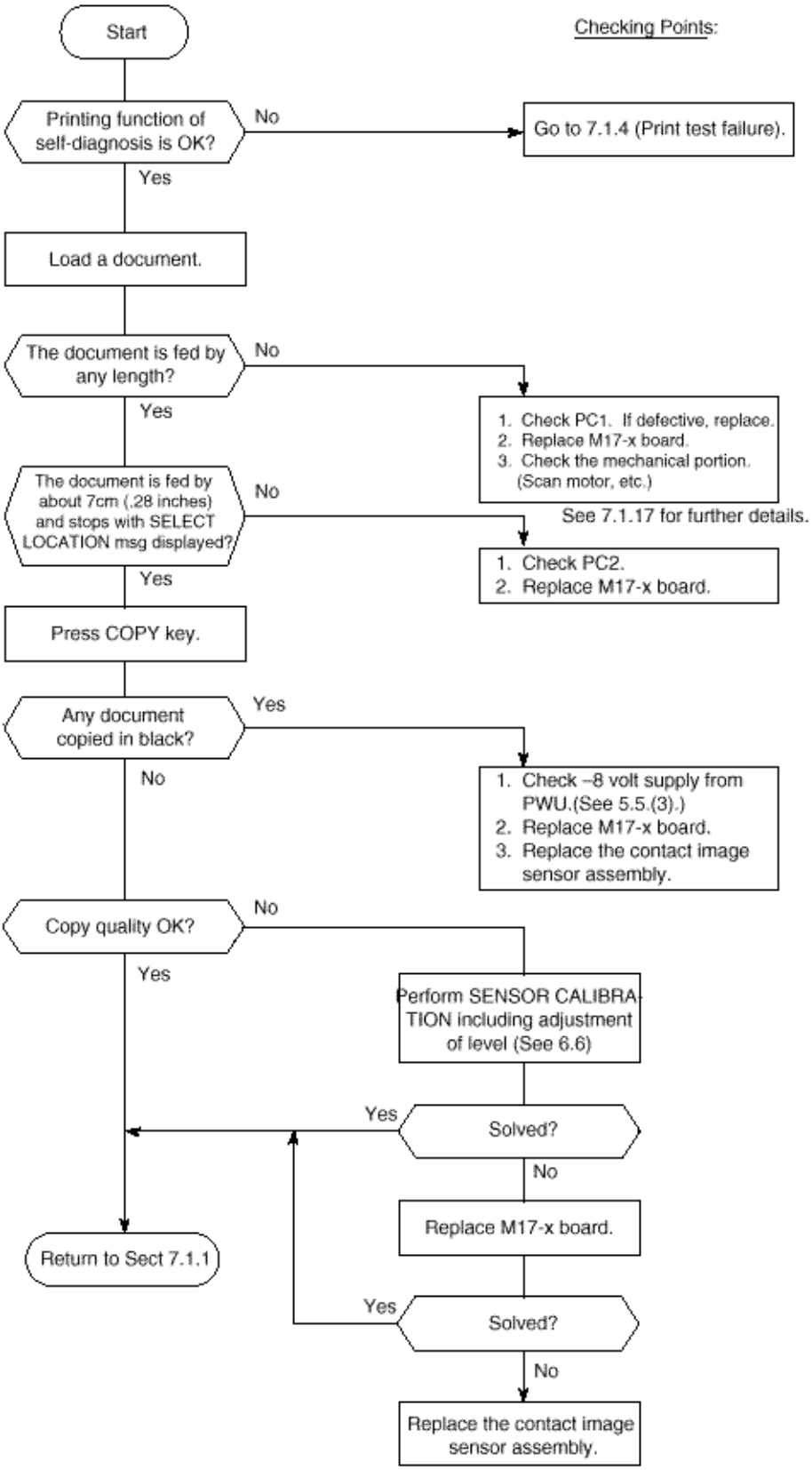
Start
Checking Points:
Printing function of self-diagnosis is OK?
No
Go to 7.1.4 (Print test failure).
Yes
Load a document.
The document is fed by any length?
No
1. Check PC1. If defective, replace.
2. Replace M17-x board.
3. Check the mechanical portion. (Scan motor, etc.)
Yes
The document is fed by about 7cm (.28 inches) and stops with SELECT LOCATION msg displayed?
No
See 7.1.17 for further details.
1. Check PC2.
2. Replace M17-x board.
Yes
Press COPY key.
Any document copied in black?
Yes
1. Check –8 volt supply from PWU.(See 5.5.(3).)
2. Replace M17-x board.
3. Replace the contact image sensor assembly.
No
Copy quality OK?
No
Yes
Perform SENSOR CALIBRATION including adjustment of level (See 6.6)
Yes
Solved?
No
Replace M17-x board.
Return to Sect 7.1.1
Yes
Solved?
No
Replace the contact image sensor assembly.

Copyright 1997, Okidata, Division of OKI America, Inc. All rights reserved. See the OKIDATA Business Partner Exchange (BPX) for any updates to this material. (http://bpx.okidata.com)

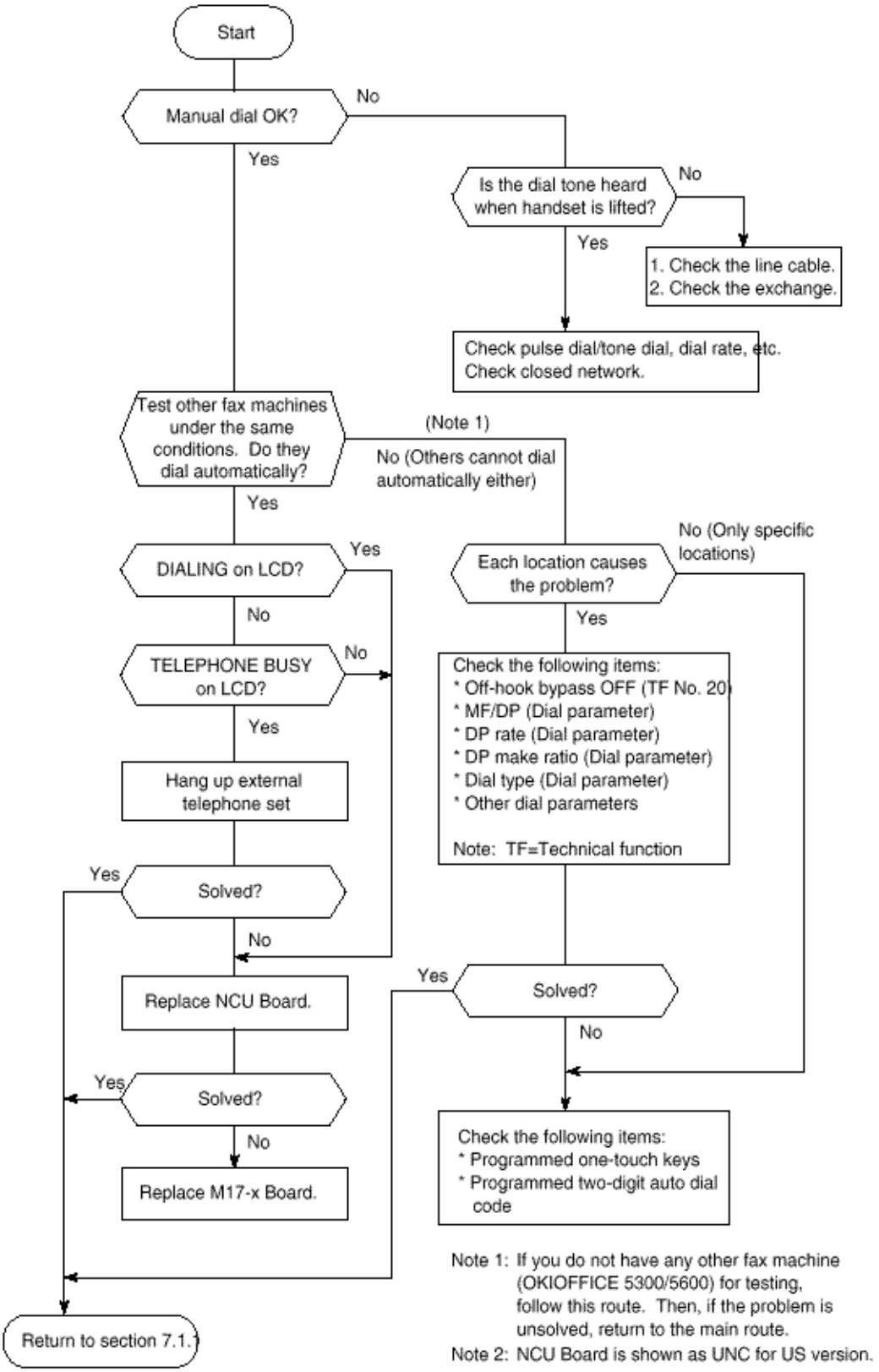
Start
Manual dial OK?
No
Yes
Is the dial tone heard when handset is lifted?
No
Yes
1. Check the line cable.
2. Check the exchange.
Check pulse dial/tone dial, dial rate, etc.
Check closed network.
Test other fax machines under the same conditions. Do they dial automatically?
(Note 1)
No (Others cannot dial automatically either)
Yes
DIALING on LCD?
Yes
No
TELEPHONE BUSY on LCD?
No
Yes
Hang up external telephone set
Yes
Solved?
No
Replace NCU Board.
Yes
Solved?
No
Replace M17-x Board.
Return to section 7.1.1
Each location causes the problem?
No (Only specific locations)
Yes
Check the following items:
* Off-hook bypass OFF (TF No. 20)
* MF/DP (Dial parameter)
* DP rate (Dial parameter)
* DP make ratio (Dial parameter)
* Dial type (Dial parameter)
* Other dial parameters
Note: TF=Technical function
Yes
Solved?
No
Check the following items:
* Programmed one-touch keys
* Programmed two-digit auto dial code
Note 1: If you do not have any other fax machine (OKIOFFICE 5300/5600) for testing, follow this route. Then, if the problem is unsolved, return to the main route.
Note 2: NCU Board is shown as UNC for US version.

Copyright 1997, Okidata, Division of OKI America, Inc. All rights reserved. See the OKIDATA Business Partner Exchange (BPX) for any updates to this material. (http://bpx.okidata.com)

This section explains how to localize the cause of problems occurred after completion of connection with a remote station.

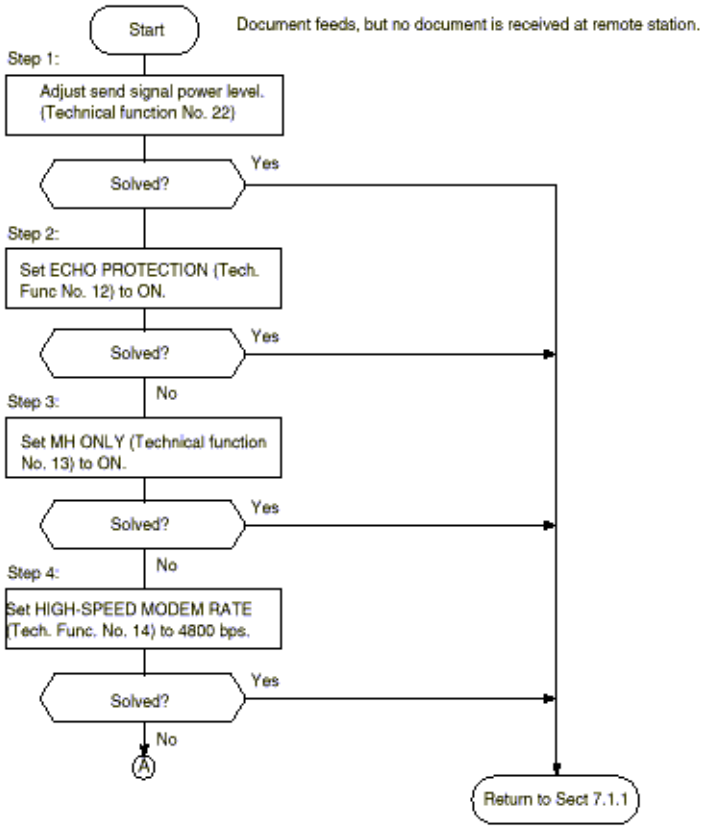

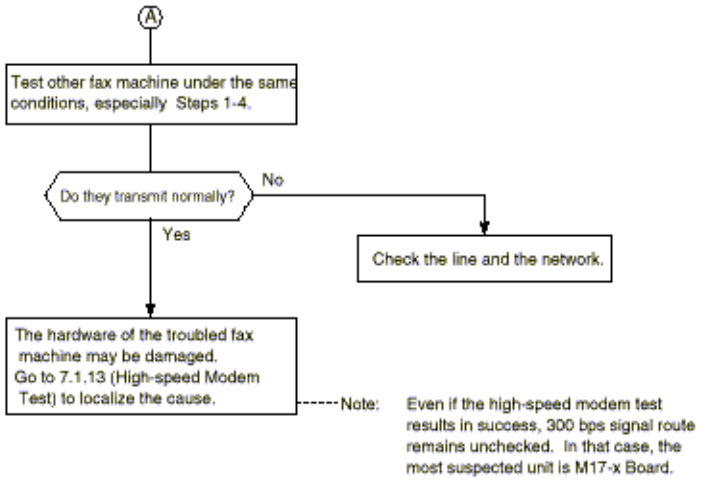

Description: Protective tone is 1700 Hz/200 ms.
This signal is added to training signal to protect the training signal against echo as follows.

Copyright 1997, Okidata, Division of OKI America, Inc. All rights reserved. See the OKIDATA Business Partner Exchange (BPX) for any updates to this material. (http://bpx.okidata.com)

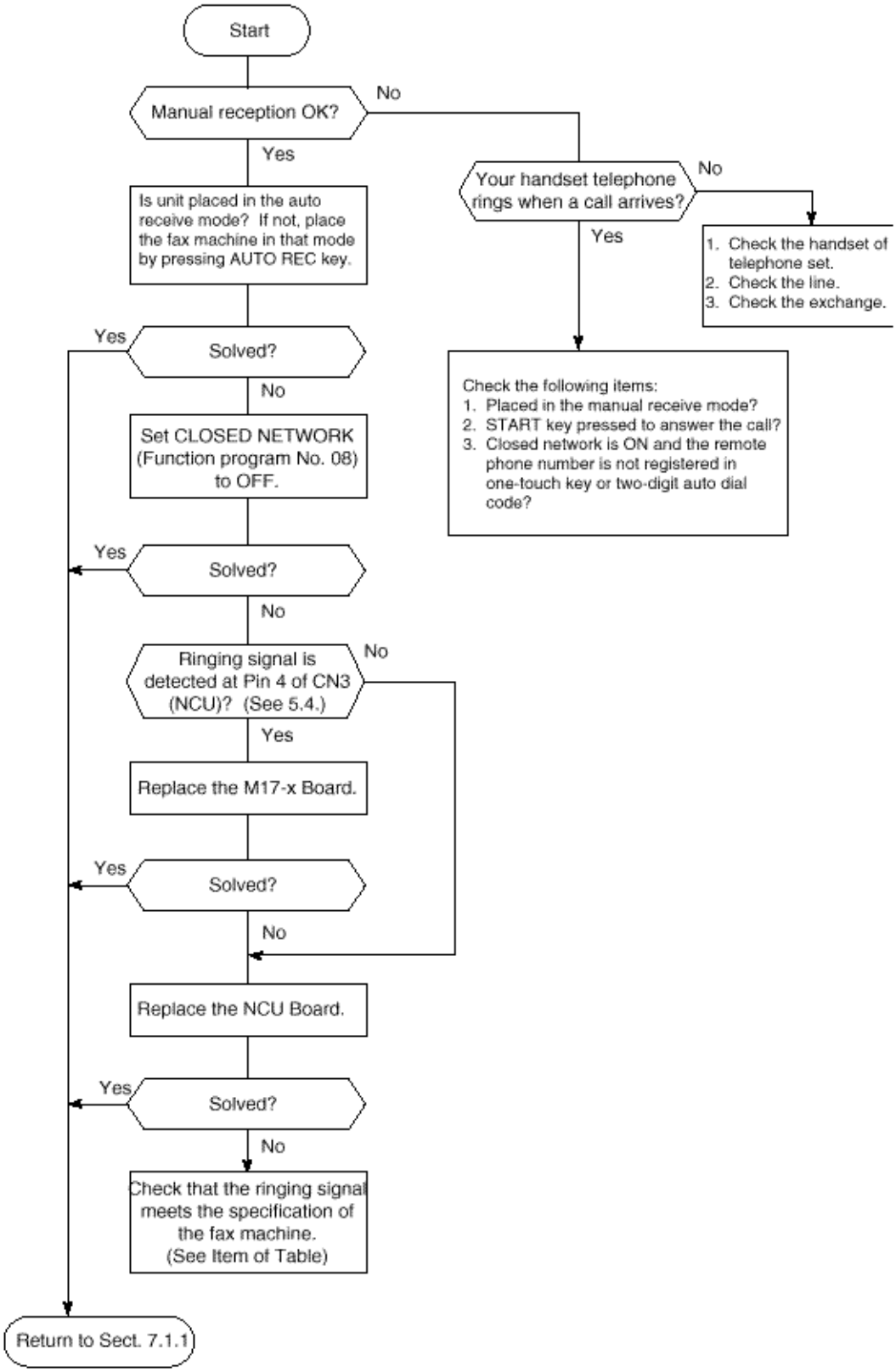

Copyright 1997, Okidata, Division of OKI America, Inc. All rights reserved. See the OKIDATA Business

Partner Exchange (BPX) for any updates to this material. (http://bpx.okidata.com)

This section explains how to localize the cause of problems occurred after completion of connection with a remote station.

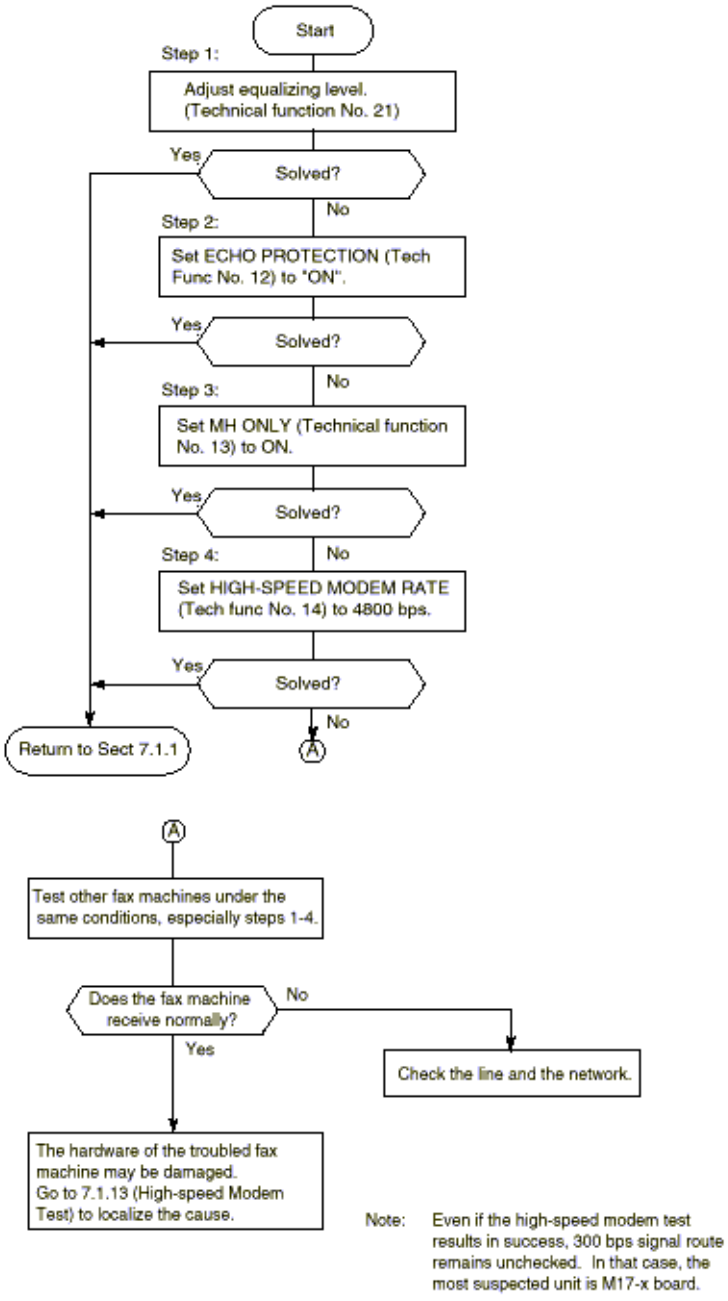

Note: Even if the high-speed modem test results in success, 300 bps signal route remains unchecked. In that case, the most suspected unit is M17-x board.

Copyright 1997, Okidata, Division of OKI America, Inc. All rights reserved. See the OKIDATA Business Partner Exchange (BPX) for any updates to this material. (http://bpx.okidata.com)

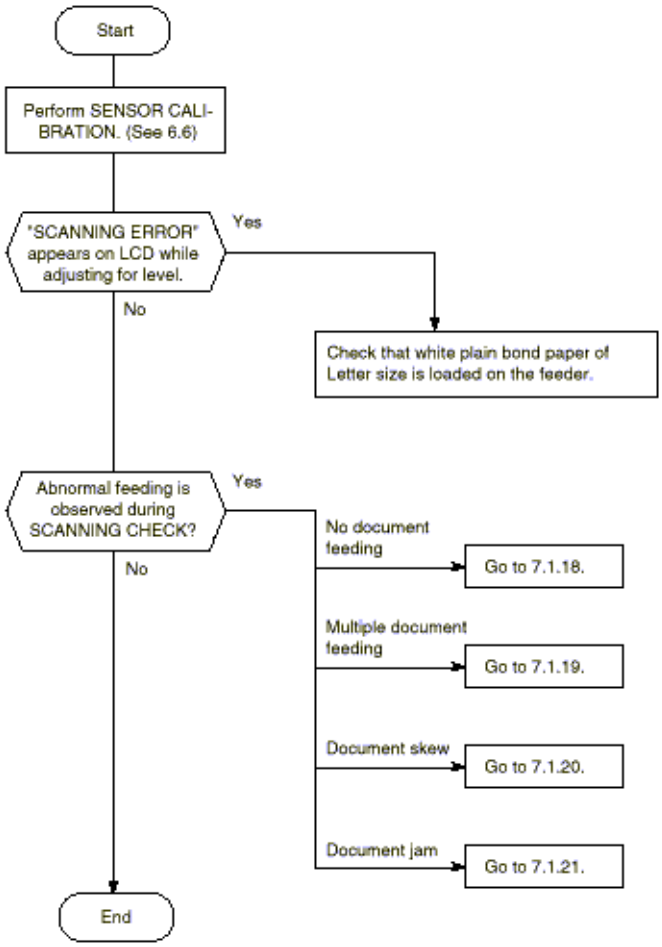

Copyright 1997, Okidata, Division of OKI America, Inc. All rights reserved. See the OKIDATA Business Partner Exchange (BPX) for any updates to this material. (http://bpx.okidata.com)

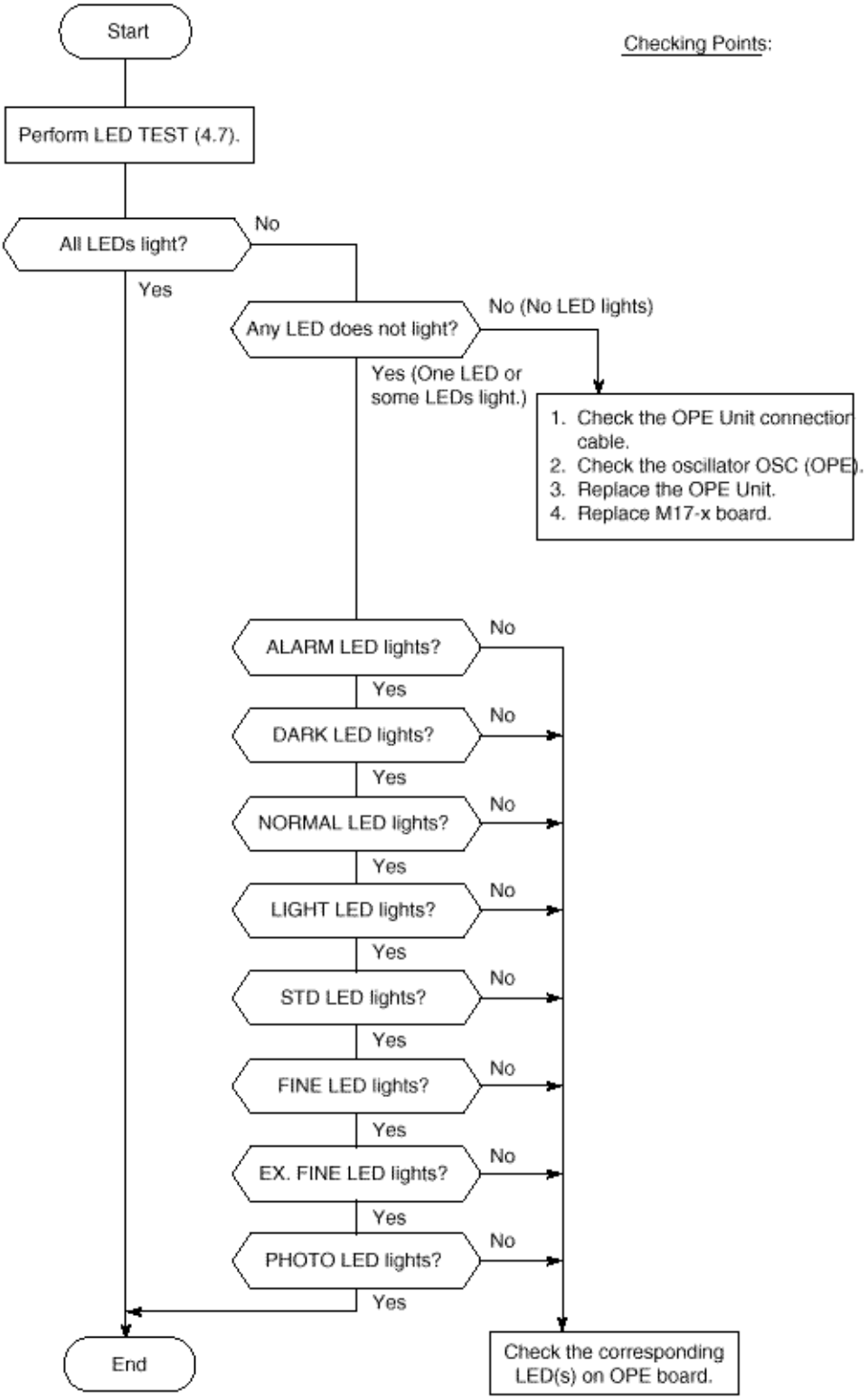

Copyright 1997, Okidata, Division of OKI America, Inc. All rights reserved. See the OKIDATA Business Partner Exchange (BPX) for any updates to this material. (http://bpx.okidata.com)

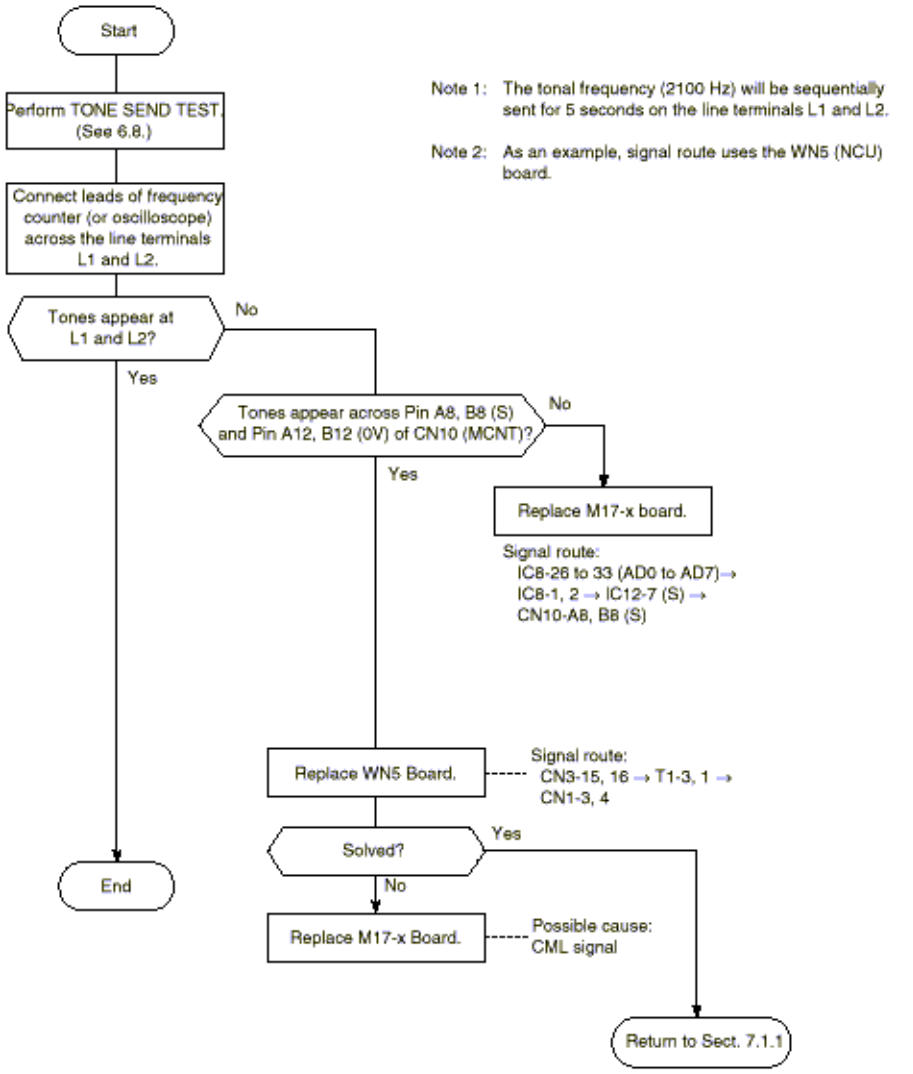

Copyright 1997, Okidata, Division of OKI America, Inc. All rights reserved. See the OKIDATA Business Partner Exchange (BPX) for any updates to this material. (http://bpx.okidata.com)

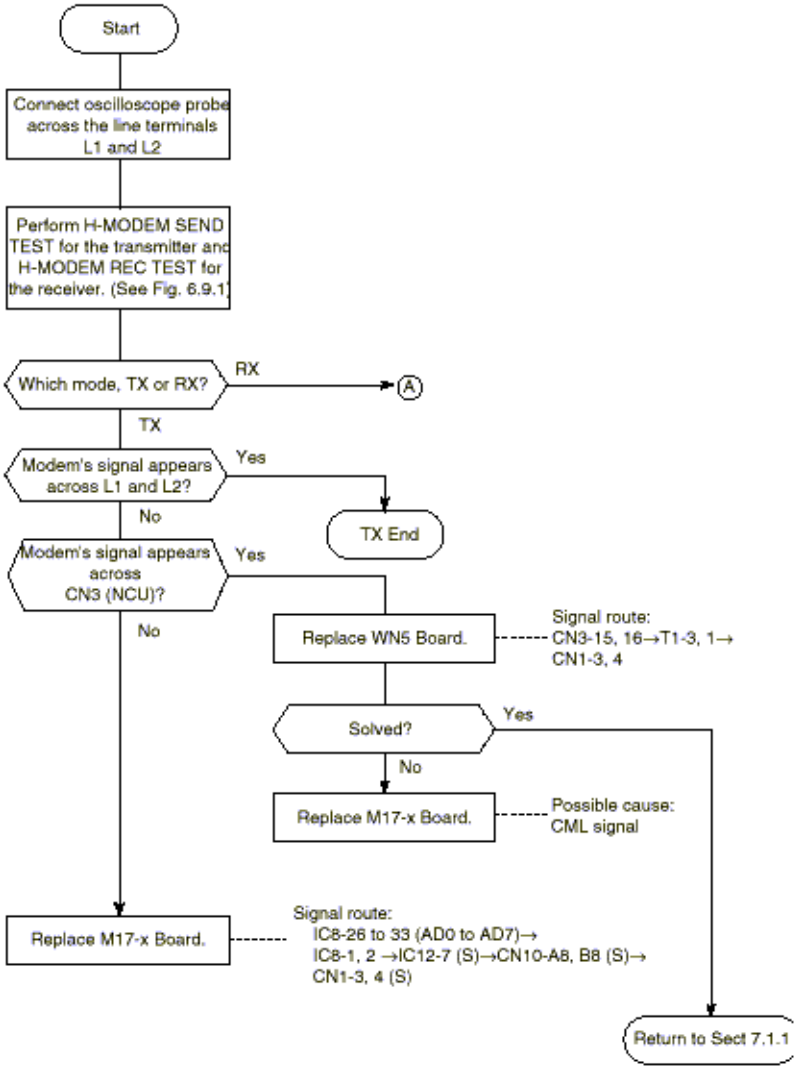
Start
Connect oscilloscope probe across the line terminals L1 and L2
Perform H-MODEM SEND TEST for the transmitter and H-MODEM REC TEST for the receiver. (See Fig. 6.9.1)
Which mode, TX or RX?
RX
A
TX
Modem's signal appears across L1 and L2?
Yes
TX End
No
Modem's signal appears across CN3 (NCU)?
Yes
No
Replace WN5 Board.
Signal route:
CN3-15, 16→T1-3, 1→
CN1-3, 4
Solved?
Yes
No
Replace M17-x Board.
Possible cause:
CML signal
Replace M17-x Board.
Signal route:
IC8-26 to 33 (AD0 to AD7)→
IC8-1, 2 →IC12-7 (S)→CN10-A8, B8 (S)→
CN1-3, 4 (S)
Return to Sect 7.1.1

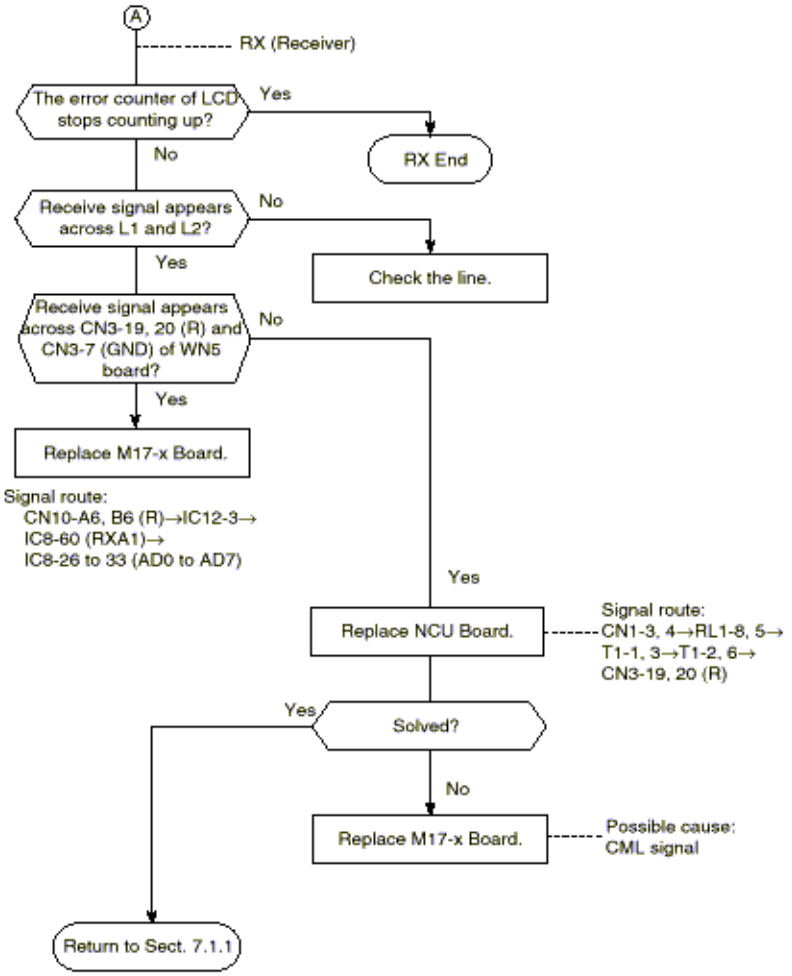

Copyright 1997, Okidata, Division of OKI America, Inc. All rights reserved. See the OKIDATA Business Partner Exchange (BPX) for any updates to this material. (http://bpx.okidata.com)

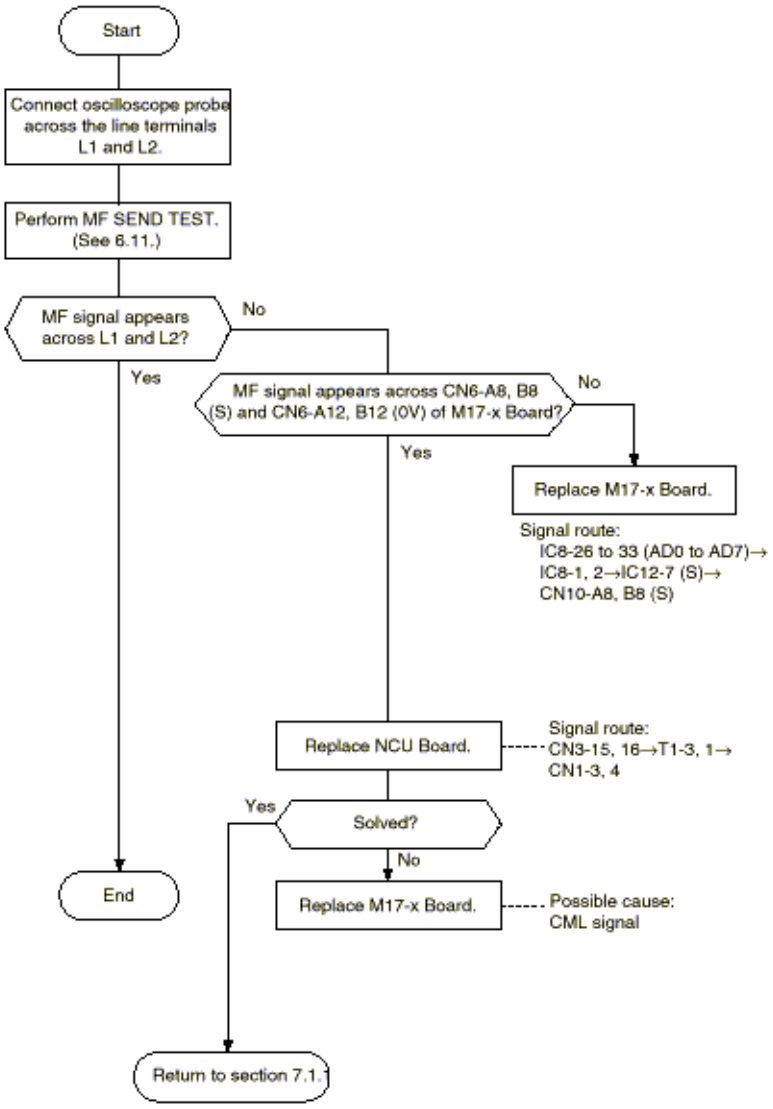

Copyright 1997, Okidata, Division of OKI America, Inc. All rights reserved. See the OKIDATA Business Partner Exchange (BPX) for any updates to this material. (http://bpx.okidata.com)

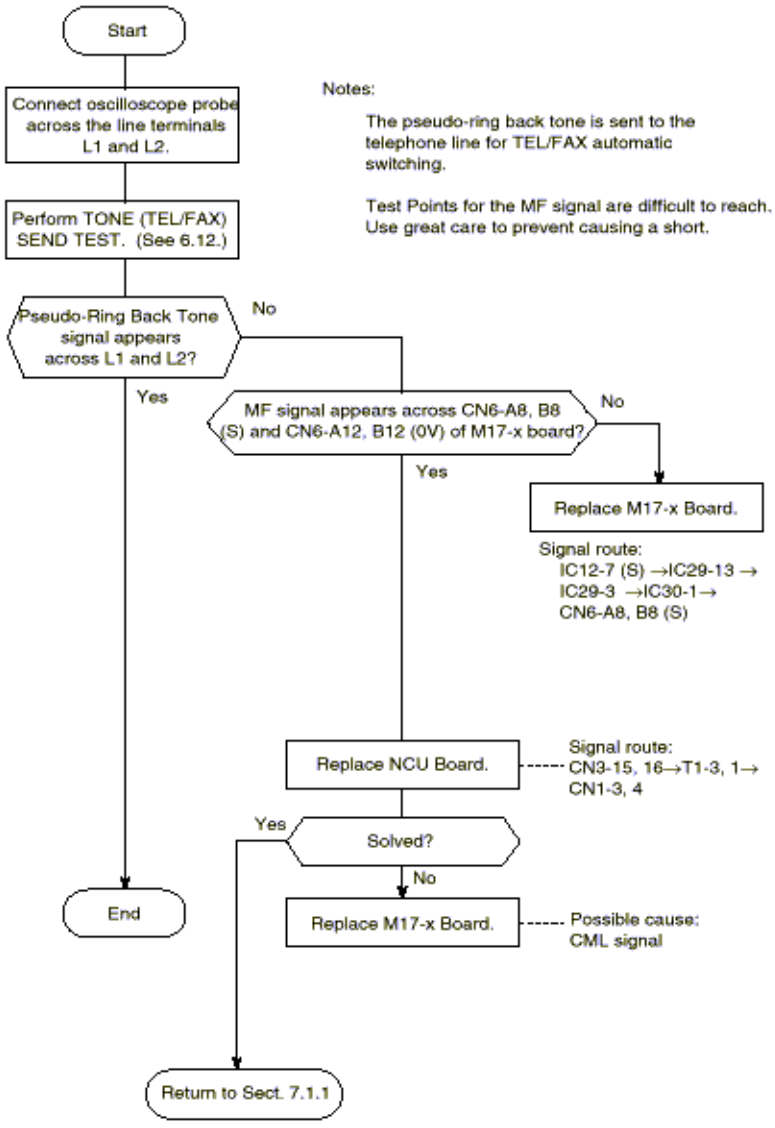

Copyright 1997, Okidata, Division of OKI America, Inc. All rights reserved. See the OKIDATA Business Partner Exchange (BPX) for any updates to this material. (http://bpx.okidata.com)

There are two source routes of acoustic line monitor:
(a) General communication signal
(b) DP pulse signal

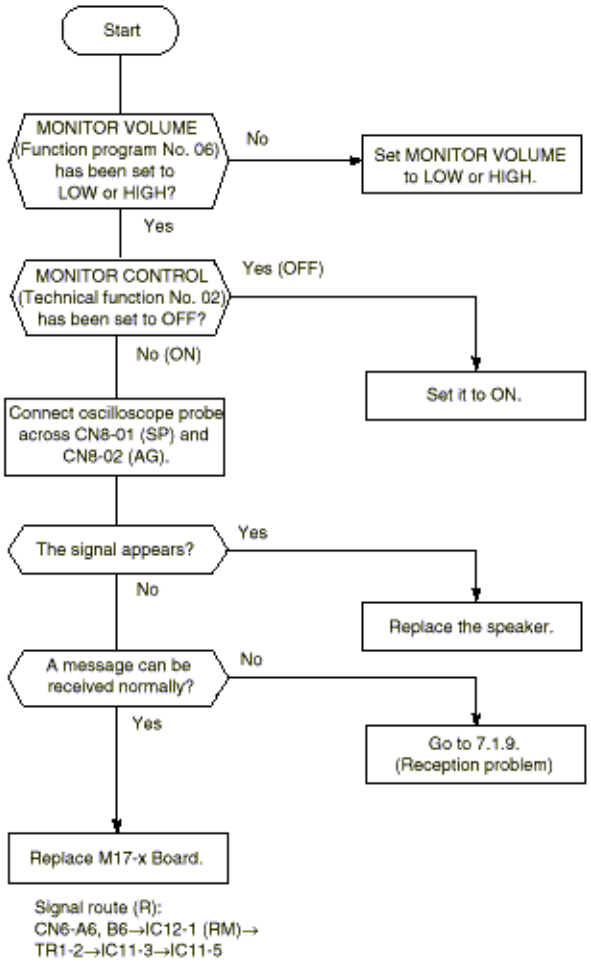

Signal route (R):
CN6-A6, B6→IC12-1 (RM)→
TR1-2→IC11-3→IC11-5

Copyright 1997, Okidata, Division of OKI America, Inc. All rights reserved. See the OKIDATA Business Partner Exchange (BPX) for any updates to this material. (http://bpx.okidata.com)

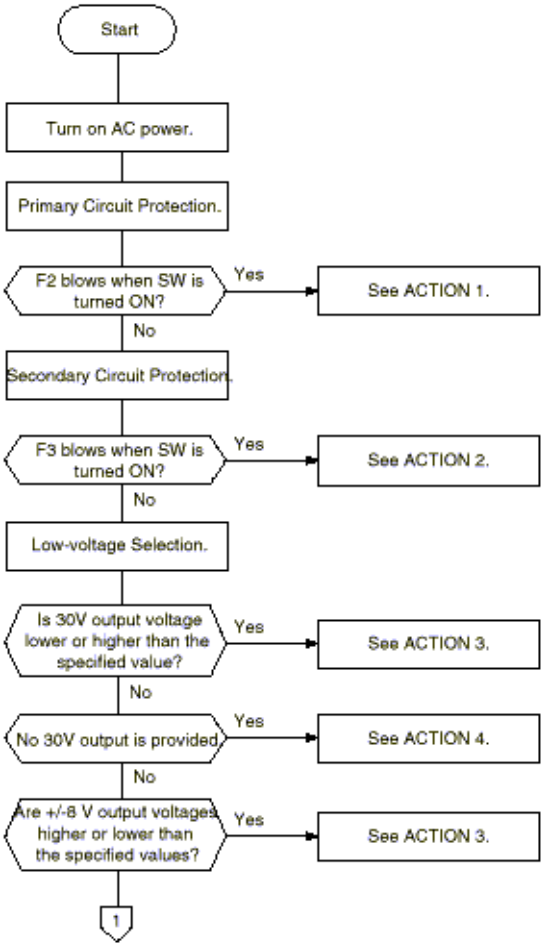
Start
Turn on AC power.
Primary Circuit Protection.
F2 blows when SW is turned ON?
Yes
See ACTION 1.
No
Secondary Circuit Protection.
F3 blows when SW is turned ON?
Yes
See ACTION 2.
No
Low-voltage Selection.
Is 30V output voltage lower or higher than the specified value?
Yes
See ACTION 3.
No
No 30V output is provided.
Yes
See ACTION 4.
No
Are +/-8 V output voltages higher or lower than the specified values?
Yes
See ACTION 3.
1

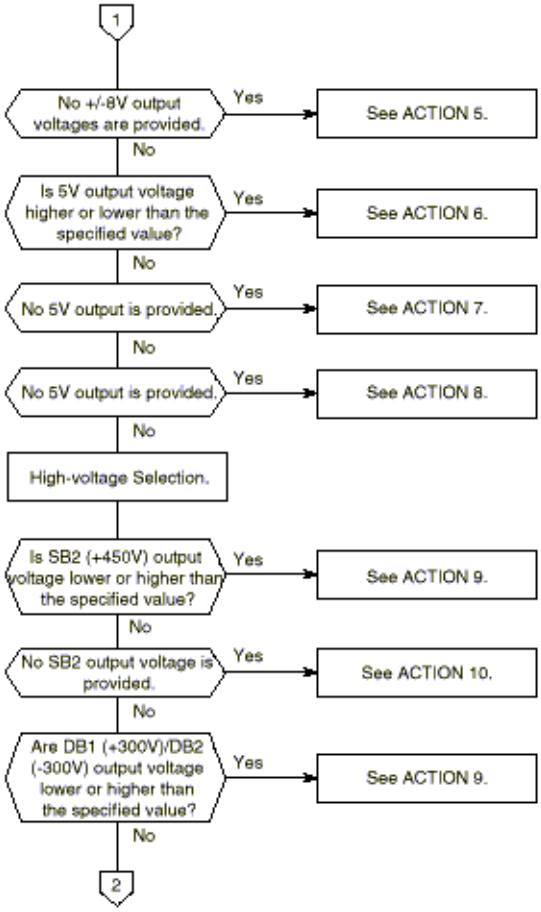
1
No +/-8V output voltages are provided.
Yes
See ACTION 5.
No
Is 5V output voltage higher or lower than the specified value?
Yes
See ACTION 6.
No
No 5V output is provided.
Yes
See ACTION 7.
No
No 5V output is provided.
Yes
See ACTION 8.
No
High-voltage Selection.
Is SB2 (+450V) output voltage lower or higher than the specified value?
Yes
See ACTION 9.
No
No SB2 output voltage is provided.
Yes
See ACTION 10.
No
Are DB1 (+300V)/DB2 (-300V) output voltage lower or higher than the specified value?
Yes
See ACTION 9.
No
2

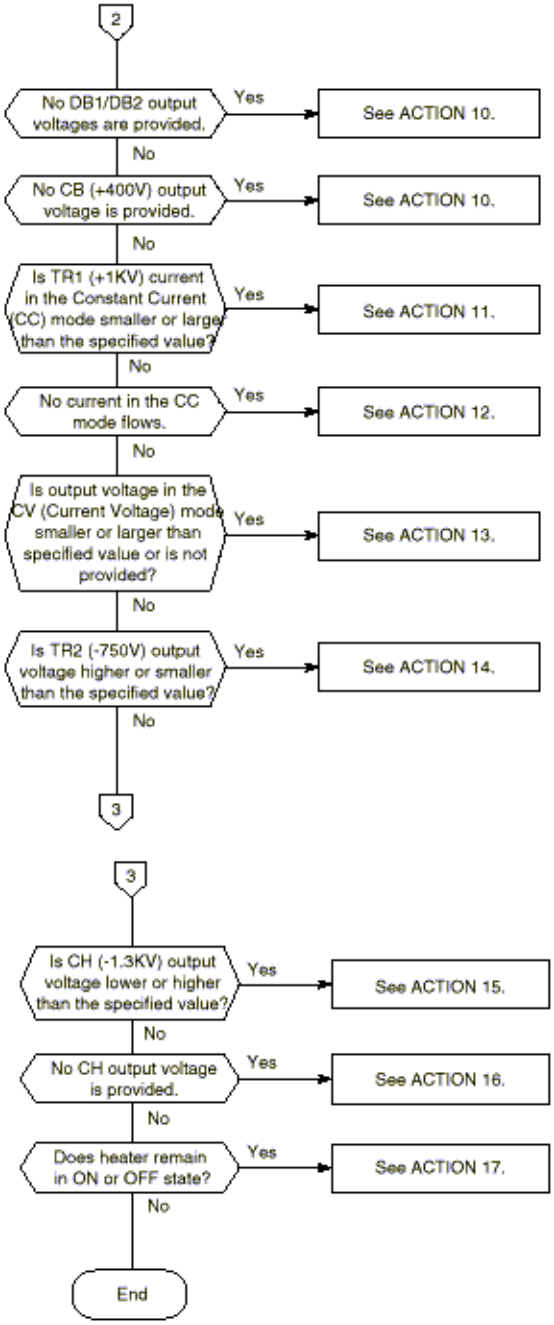
2
No DB1/DB2 output voltages are provided.
Yes
See ACTION 10.
No
No CB (+400V) output voltage is provided.
Yes
See ACTION 10.
No
Is TR1 (+1KV) current in the Constant Current (CC) mode smaller or larger than the specified value?
Yes
See ACTION 11.
No
No current in the CC mode flows.
Yes
See ACTION 12.
No
Is output voltage in the CV (Current Voltage) mode smaller or larger than specified value or is not provided?
Yes
See ACTION 13.
No
Is TR2 (-750V) output voltage higher or smaller than the specified value?
Yes
See ACTION 14.
No
3
3
Is CH (-1.3KV) output voltage lower or higher than the specified value?
Yes
See ACTION 15.
No
No CH output voltage is provided.
Yes
See ACTION 16.
No
Does heater remain in ON or OFF state?
Yes
See ACTION 17.
No
End

No.	ACTION
1	Probable cause 1: A double AC voltage is applied (200V is applied to a 120V transformer). Check item 1: Check the input AC voltage. Probable cause 2: A short-circuit between lines after F2. Check item 2: Check the pattern on PCB and T1.
2	Probable cause 2: Short-circuit in 30V output circuit. Check item 1: Check DS1, C7, and R53. Probable cause 2: A short-circuit in 5V output circuit. Check item 2: Check Q1, D6, D7, C6, C10, C20, D6, D8, R4, R9, R83, R10, R11, and C35. If D8 and D6 operate and F3 blows when 5V overvoltage is detected, D8 and Q1 may be detective. Replace both D8 and Q1.
3	Probable cause 1: If the AC voltage is high (127V or more)/(250V or more), the output voltage becomes higher than the specified value. If the AC voltage is low (102V or less)/(198V or less), the output voltage becomes lower than the specified value. Check item 1: Check the AC voltage. Probable cause 2: If the load setting is large, the output voltage becomes lower than the specified value. Check item 2: Check the load resister. Probable cause 3: DS1 is defective (if the 30V output voltage is low). Check item 3: Check DS1 and R53.
4	Probable cause 1: F3 blows. → See ACTION 2. Probable cause 2: T1 is defective. Check item 2: Check secondary side pins 1 to 3 and primary side pins 1 and 2 of T1. Check item 3: Check DS1 for shorting and opening.
5	Probable cause 1: D10 and D11 are defective. Check item 1: Check the AC voltage. Probable cause 2: T1 is defective. Check item 2: Check pins 5 and 6 of T1 (thermal fuse may blow).
6	Probable cause 1: The reference resister is defective. Check item 1: Check R83, R10 and R11 (tolerance error: +/- 1%). Probable cause 2: IC1 is defective. Check item 2: Check IC1-1 pin (normal value: 2.45 to 2.69V).
7	Probable cause 1: F3 blows. → See ACTION 2.
8	Probable cause 1: C19 and C20 are defective. Check item 1: Check C10 and C20. Probable cause 2: L3 is defective. Check item 2: Check L3. Probable cause 3: C8 and C35 are defective. Check item 3: Check C8 and C35.

No.	ACTION
9	Probable cause 1: D85 is defective. Check item 1: Replace D85. Probable cause 2: The load is larger than the normal value. Check item 2: Check if the load current is 2μA or less. Probable cause 3: D52 is defective. Check item 3: Check if D52 is iZ300 class Y or Z (class X is not acceptable).
10	Probable cause 1: Q11 and Q12 are malfunctioning. Check item 1: Check the PWM waveform of DB output (cycle: 142 μs, ON time: 36μs). Check item 2: Check Q11 and Q12. Check the base voltage of Q21, Q22 and Q23 (3.7V or more to 3.9V or more).
11	Probable cause 1: Current set resistor R115 is defective. Check item 1: Check R115 (tolerance error: +/-1%) Probable cause 2: The reference voltage is incorrect. Check item 2: Check if the voltage at CN3-B10 pin is 2.5V. Check item 3: Check the PWM waveform of TR1 (cycle: 142Ms, ON time: 36 μs).
12	Probable cause 1: CC (Constant Current) mode is not set. Check item 1: Check if TR SEL2 is "H". Probable cause 2: T2 is defective. Check item 2: Replace T2. Check T2. Probable cause 3: Check (3) of ACTION 11.
13	Probable cause 1: The voltage memory circuit is malfunctioning. Check item 1: Check if the average value of the VSEN voltage in the CC mode is equal to that in the CV (Current Voltage) mode. Check if the voltage across C230 remains unchanged in the CV mode (for 15 seconds or more).
14	Probable cause 1: D65 or D66 is defective. Check item 1: Check if these diodes are 1ZB390. Check item 2: Check the PWM waveform of TR2 output (cycle: 146μs, ON time: 36μs). Check item 3: Check if TR1 is "L" or TR2 is "H" (if TR1 is "H", TR1 output appears).
15	Probable cause 1: The class of D76 or D82 is incorrect. Check item 1: Check if both D76 and D82 are of EB-2 class. Probable cause 2: The load current is lower than the specified value. Check item 2: The load current shall be 6 to 8μA. (Namely, the load current shall not be more than or less than this limit range.)

No.	ACTION
16	Check item 1: Check the PWM waveform of CH (cycle: 42µs, ON time: 36µs).
17	Probable cause 1: D1 is detective. Check item 1: Check if both D1 and T1 or D1 and T2 are shorted. Probable cause 2: The D1 drive circuit is defective. Check item 2: Check PC1. [Whether PC1 turns ON or OFF according to the level of HEAT signal (CN3-B7)?] Check if R2 or R3 is in open state (This cannot be observed from the external appearance because these resistors are fusible resistor.)

Copyright 1997, Okidata, Division of OKI America, Inc. All rights reserved. See the OKIDATA Business Partner Exchange (BPX) for any updates to this material. (http://bpx.okidata.com)

Note: This section places an emphasis on troubleshooting of mechanical portions. Therefore, it is recommended to replace the MCNT Board first and, then if not solved, follow this flow chart.

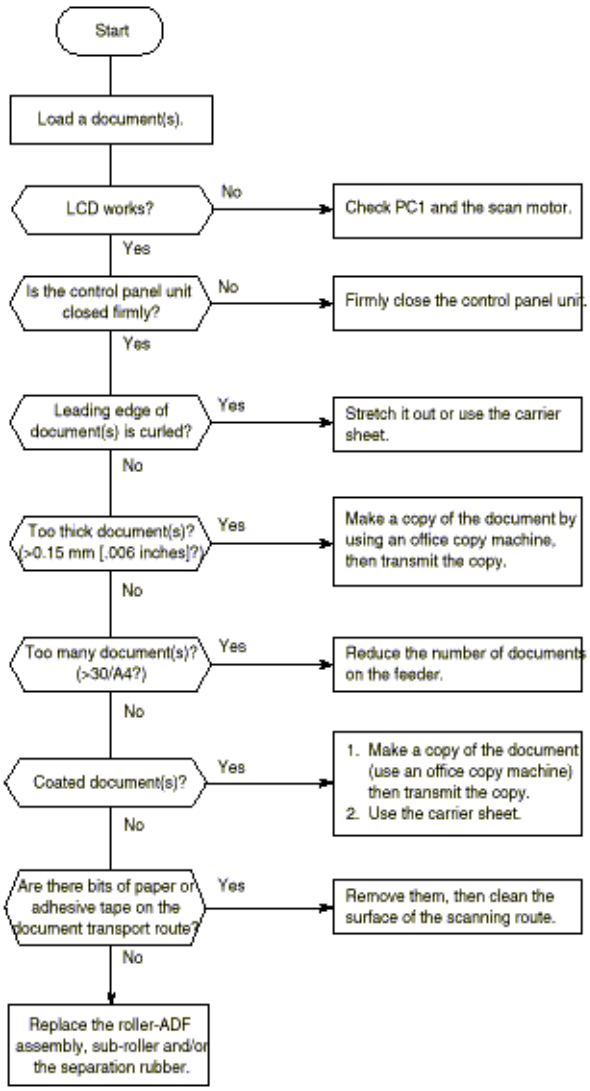

Copyright 1997, Okidata, Division of OKI America, Inc. All rights reserved. See the OKIDATA Business Partner Exchange (BPX) for any updates to this material. (http://bpx.okidata.com)

Definition: Multiple document feeding.
Multiple documents are not separated and they are fed all at the same time.

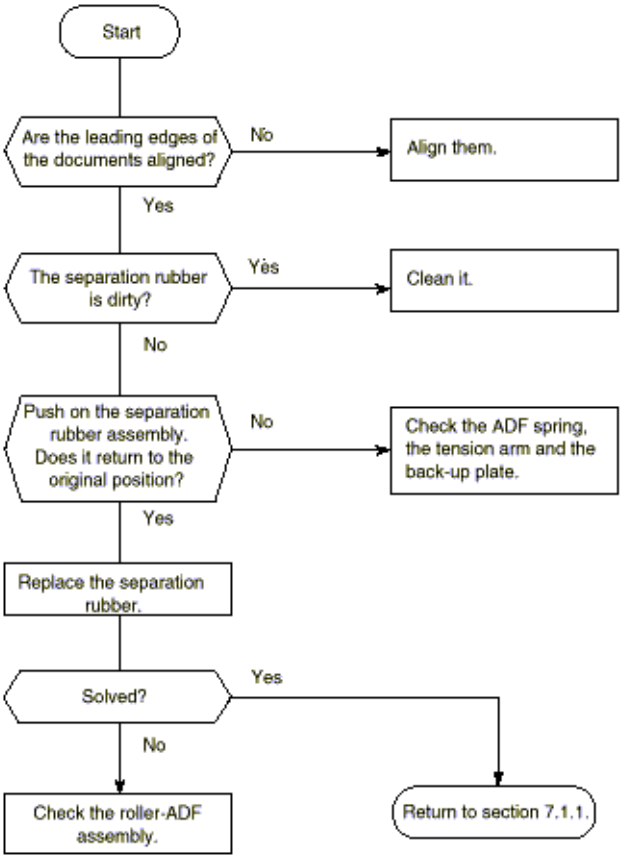

Copyright 1997, Okidata, Division of OKI America, Inc. All rights reserved. See the OKIDATA Business Partner Exchange (BPX) for any updates to this material. (http://bpx.okidata.com)

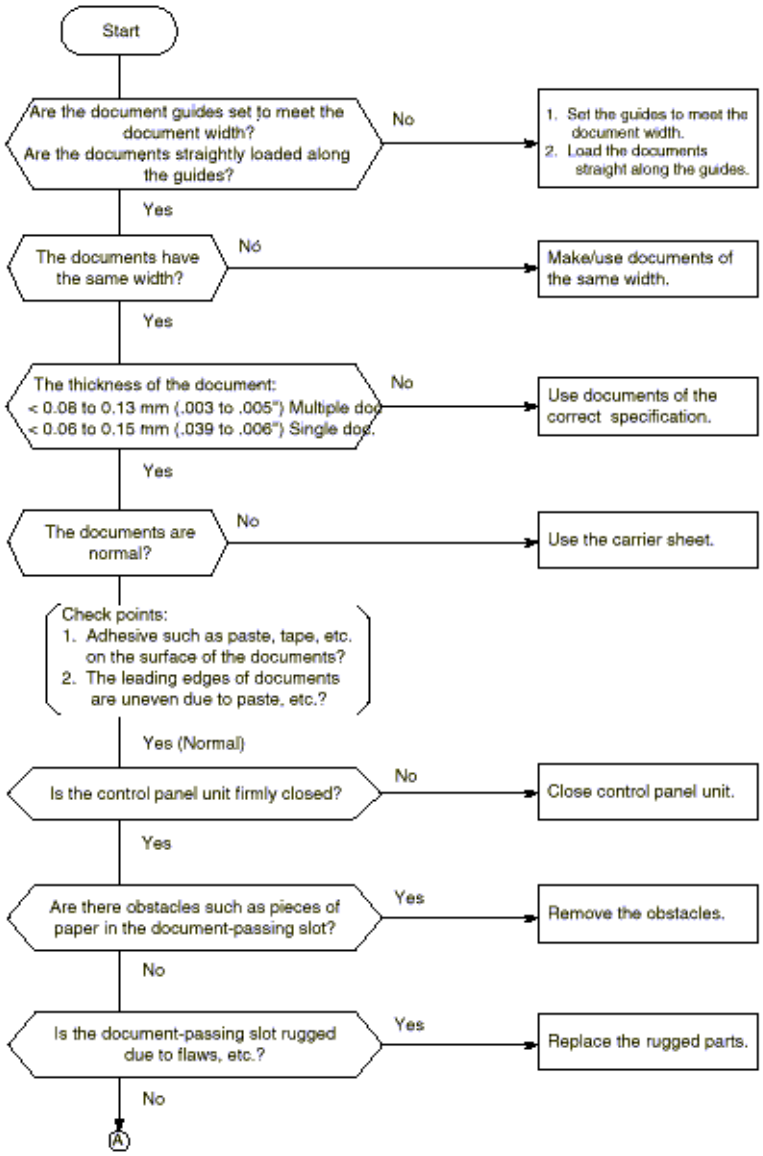
Start
Are the document guides set to meet the document width? Are the documents straightly loaded along the guides?
No
1. Set the guides to meet the document width.
2. Load the documents straight along the guides.
Yes
The documents have the same width?
No
Make/use documents of the same width.
Yes
The thickness of the document:
< 0.08 to 0.13 mm (.003 to .005") Multiple doc
< 0.06 to 0.15 mm (.039 to .006") Single doc.
No
Use documents of the correct specification.
Yes
The documents are normal?
No
Use the carrier sheet.
Check points:
1. Adhesive such as paste, tape, etc. on the surface of the documents?
2. The leading edges of documents are uneven due to paste, etc.?
Yes (Normal)
Is the control panel unit firmly closed?
No
Close control panel unit.
Yes
Are there obstacles such as pieces of paper in the document-passing slot?
Yes
Remove the obstacles.
No
Is the document-passing slot rugged due to flaws, etc.?
Yes
Replace the rugged parts.
No
A

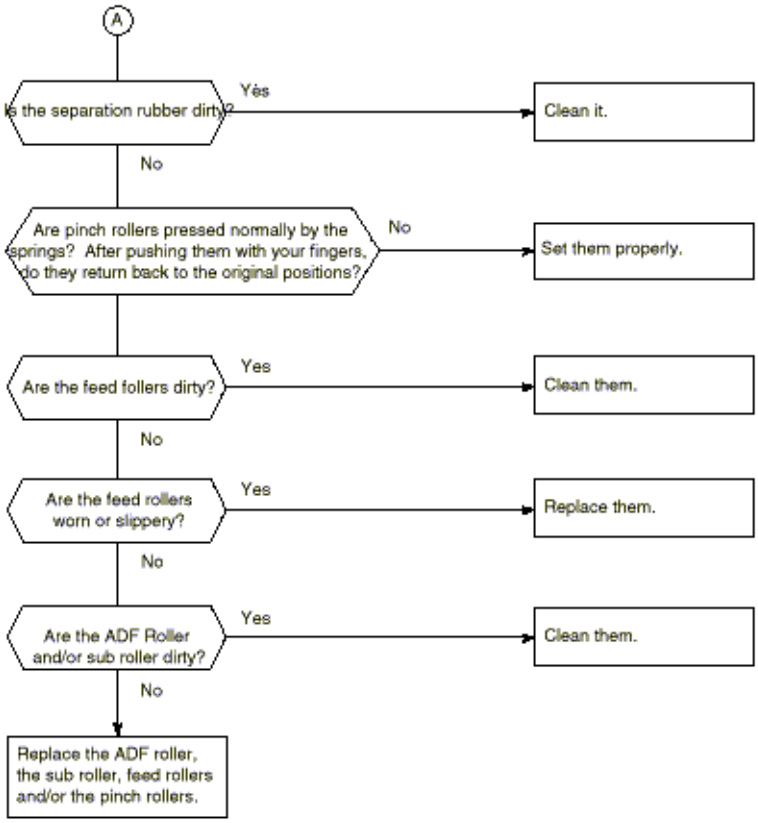

Copyright 1997, Okidata, Division of OKI America, Inc. All rights reserved. See the OKIDATA Business Partner Exchange (BPX) for any updates to this material. (http://bpx.okidata.com)

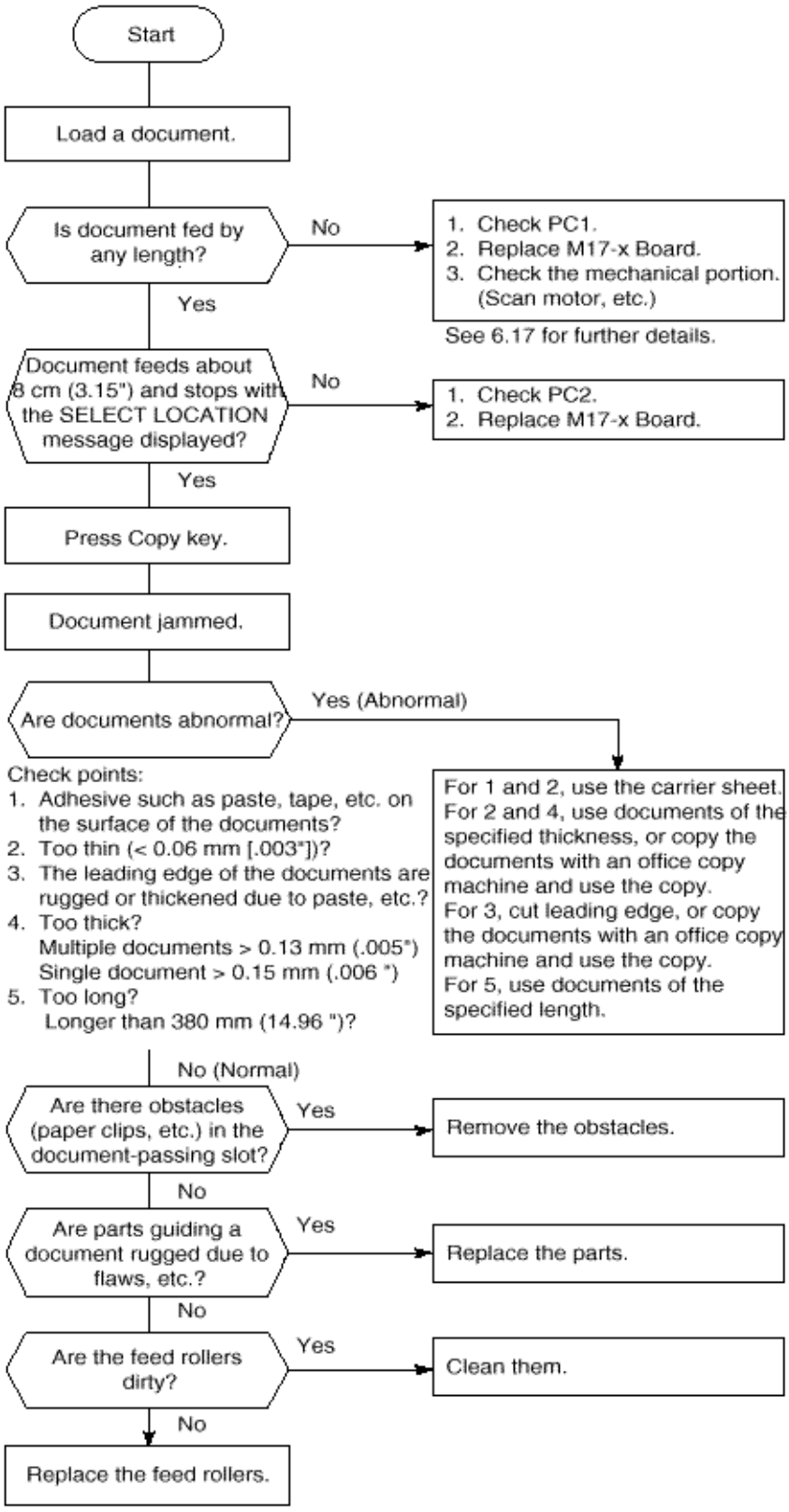

Copyright 1997, Okidata, Division of OKI America, Inc. All rights reserved. See the OKIDATA Business

Partner Exchange (BPX) for any updates to this material. (http://bpx.okidata.com)

7.1.22.1 Precautions

7.1.22.2 Troubleshooting Flow Charts of Printer Unit

7.1.22.3 Image Problems Table

Copyright 1997, Okidata, Division of OKI America, Inc. All rights reserved. See the OKIDATA Business Partner Exchange (BPX) for any updates to this material. (http://bpx.okidata.com)

1. Points to check before correcting image troubles

(1) Is the printer being run in proper ambient conditions?

(2) Have the supplies (toner) and the routine replacement part (EP unit) been replaced properly?

(3) Is the recording paper normal?

(4) Has the EP unit been loaded properly?

2. Tips for correcting image troubles

(1) Do not touch, or bring foreign matter into contact with the surface of the drum.

(2) Do not expose the drum to direct sunlight.

(3) Keep hands off the fuser unit as it is heated during operation.

(4) Do not expose the drum to light for longer than 5 minutes at room temperature.

Copyright 1997, Okidata, Division of OKI America, Inc. All rights reserved. See the OKIDATA Business Partner Exchange (BPX) for any updates to this material. (http://bpx.okidata.com)

Overall Troubleshooting Flowchart

1: Top Cover is Open

2: Replace Image Drum Message

3: Engine Controller Error

4: Fan Motor Rotation Error

5: Fuser Unit Thermal Error

6: Paper Jams

7: No Paper Tray or No Paper

Action Items (Printer Unit-LCD Message) Table 7.1.22.2

Copyright 1997, Okidata, Division of OKI America, Inc. All rights reserved. See the OKIDATA Business Partner Exchange (BPX) for any updates to this material. (http://bpx.okidata.com)

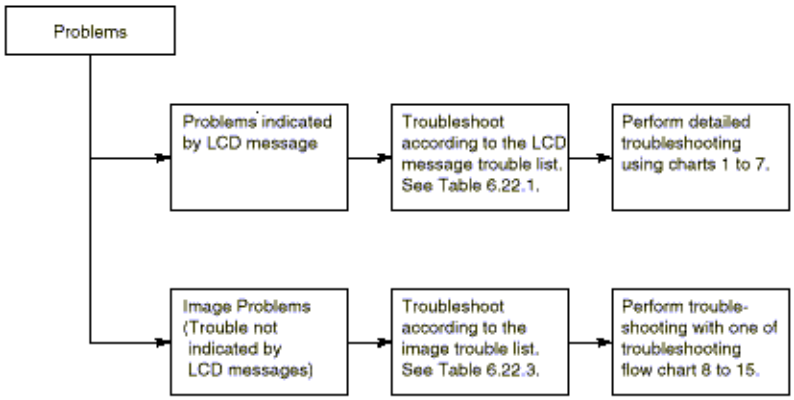

Category	LCD message display	Trouble	Troubleshooting flow chart number
Cover open	14:14 [FAX] COVER OPEN	The cover (cover-top) is open.	1
Image drum alarm	14:14 [FAX] CHANGE DRUM	Warning message to replace EP unit because of its life.	2
Engine errors	PRINTER ALARM 2[TEL] PLEASE CONFIRM	Engine controller error (Opt.: 2nd Tray)	3
	PRINTER ALARM 3[TEL] PLEASE CONFIRM	Fan Motor Rotation Error	4
	PRINTER ALARM 4[TEL] PLEASE CONFIRM	Fuser unit thermal error	5
Recording paper jam error	PAPER JAM [FAX] CONFIRM AND "STOP"	Recording paper feed jam, transport jam, ejection jam, recording size error	6
Paper cassette request	NO PAPER [FAX] REPLACE PAPER	No recording paper tray or no recording paper	7
Daily status	TONER LOW [FAX] REPLACE TONER CART.	Toner is running short. Note: No toner memory RX is ON.	
	14:14 [FAX] REPLACE TONER CART.	Toner is running short. Note: No toner memory RX is OFF.	

Copyright 1997, Okidata, Division of OKI America, Inc. All rights reserved. See the OKIDATA Business Partner Exchange (BPX) for any updates to this material. (http://bpx.okidata.com)

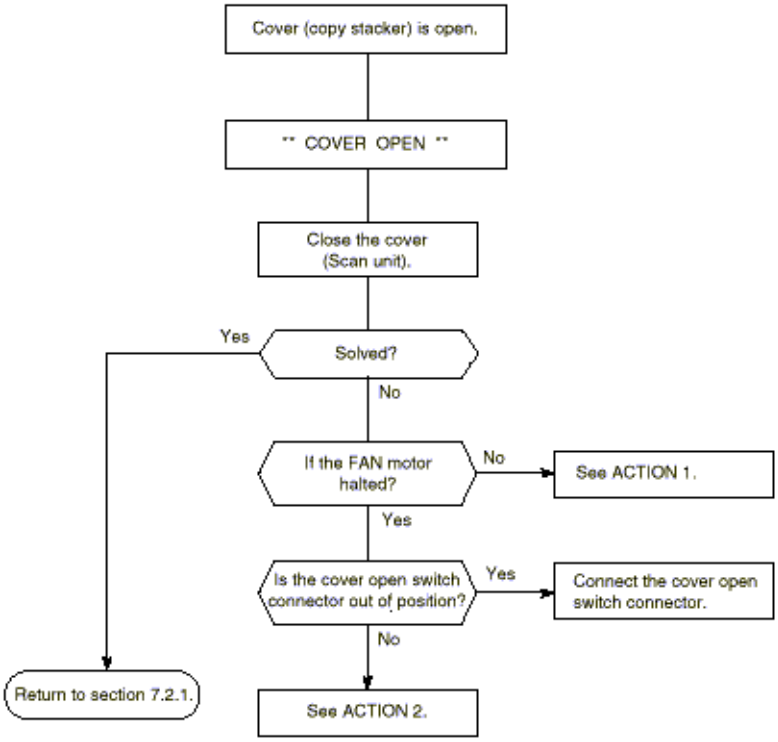

Copyright 1997, Okidata, Division of OKI America, Inc. All rights reserved. See the OKIDATA Business Partner Exchange (BPX) for any updates to this material. (http://bpx.okidata.com)

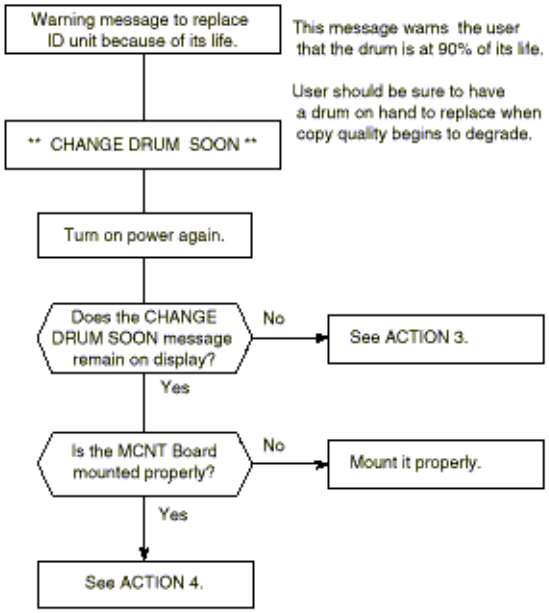

Copyright 1997, Okidata, Division of OKI America, Inc. All rights reserved. See the OKIDATA Business Partner Exchange (BPX) for any updates to this material. (http://bpx.okidata.com)

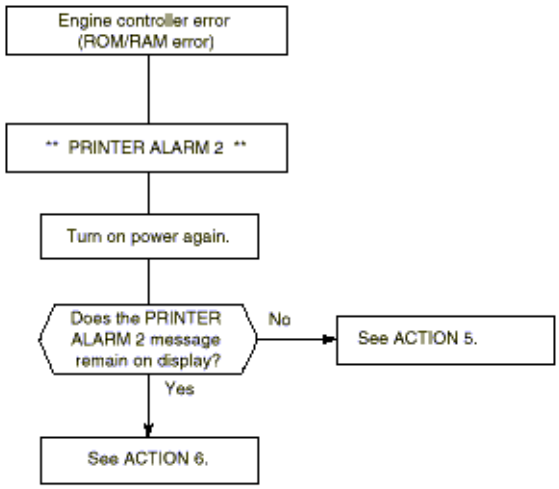

Copyright 1997, Okidata, Division of OKI America, Inc. All rights reserved. See the OKIDATA Business Partner Exchange (BPX) for any updates to this material. (http://bpx.okidata.com)

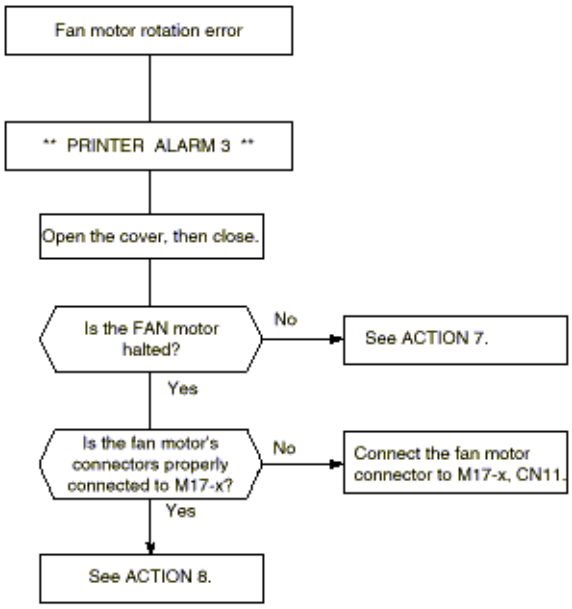

Copyright 1997, Okidata, Division of OKI America, Inc. All rights reserved. See the OKIDATA Business Partner Exchange (BPX) for any updates to this material. (http://bpx.okidata.com)

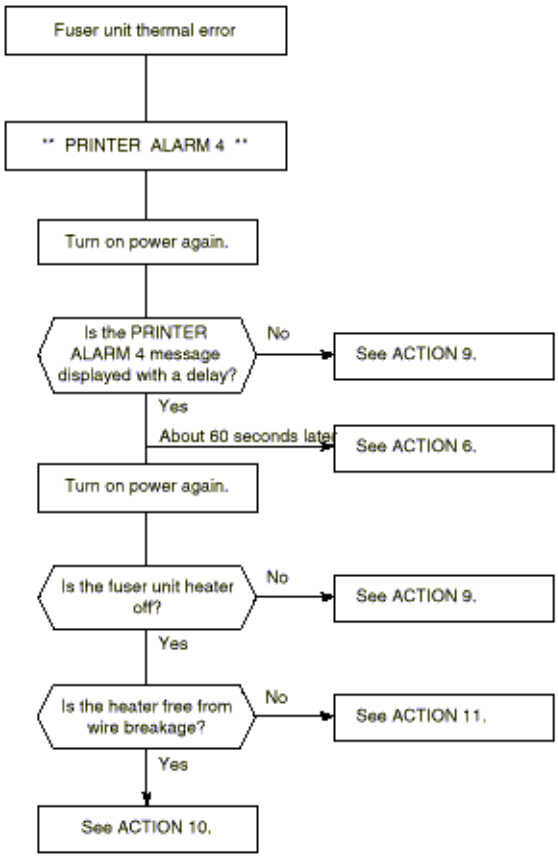

Copyright 1997, Okidata, Division of OKI America, Inc. All rights reserved. See the OKIDATA Business Partner Exchange (BPX) for any updates to this material. (http://bpx.okidata.com)

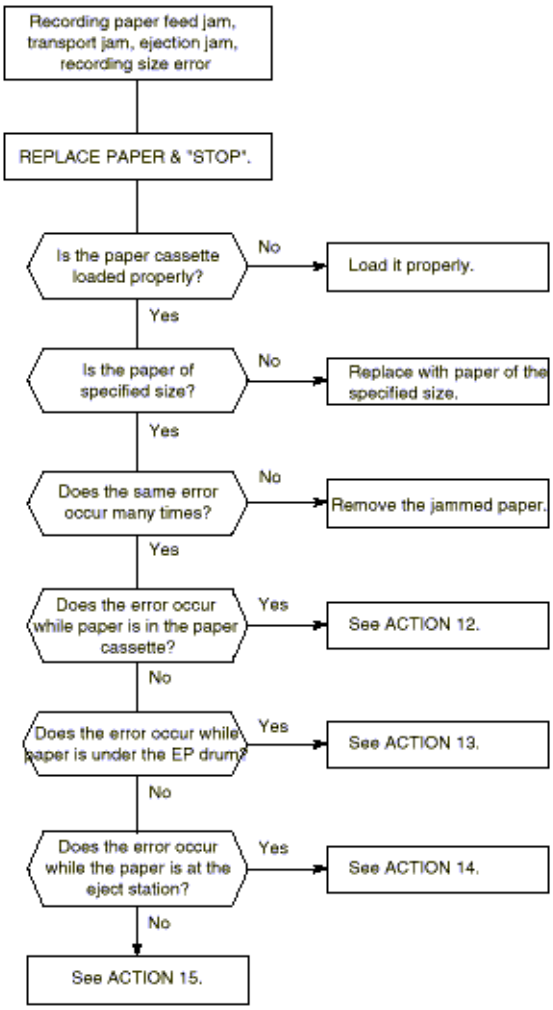

Copyright 1997, Okidata, Division of OKI America, Inc. All rights reserved. See the OKIDATA Business Partner Exchange (BPX) for any updates to this material. (http://bpx.okidata.com)

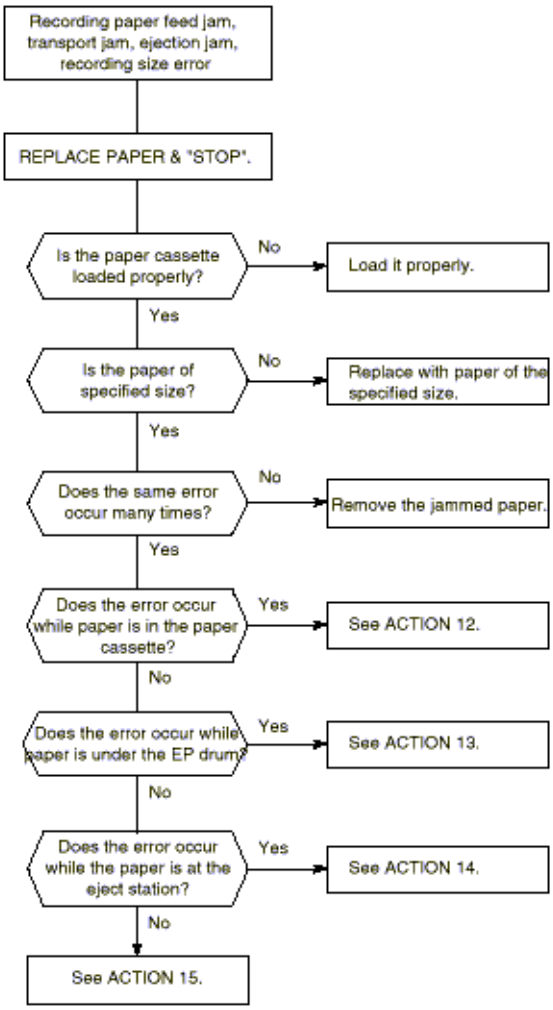

Copyright 1997, Okidata, Division of OKI America, Inc. All rights reserved. See the OKIDATA Business Partner Exchange (BPX) for any updates to this material. (http://bpx.okidata.com)

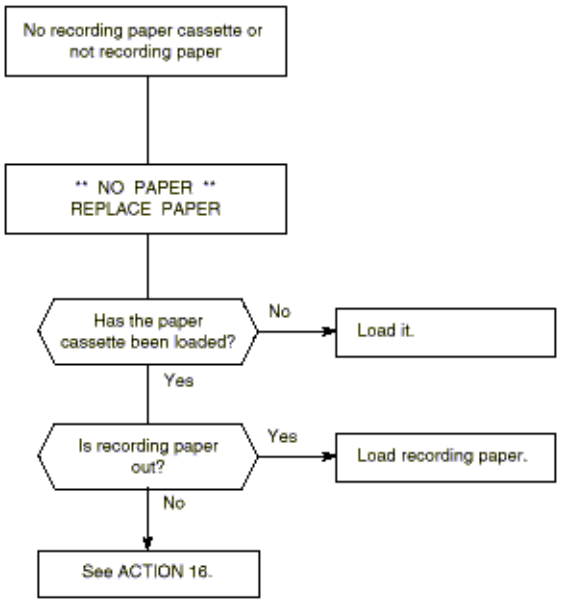

Copyright 1997, Okidata, Division of OKI America, Inc. All rights reserved. See the OKIDATA Business Partner Exchange (BPX) for any updates to this material. (http://bpx.okidata.com)

No.	ACTION
1	Check M17-x Board.
2	Check POWER SUPPLY UNIT. cover open switch, cover open switch connection. Check M17-x Board.
3	Return to Section 7.1.
4	Replace the ID Unit.
5	Check installation of M17-x board, POWER SUPPLY UNIT board. Ensure good connection between the machine and the 2nd Tray Unit.
6	Check M17-x Board.
7	Check FAN motor, M17-x Board.
8	Check FAN motor, M17-x Board, POWER SUPPLY UNIT.
9	Check thermister (resistance about 100 kilo ohms at room temperature and about 1.5 kilo ohms at high temperature), POWER SUPPLY UNIT. Clean contacts on fuser and contact assembly.
10	Check connection between the PWU and the fuser assembly, heater, thermostat.
11	Check PWU. Clean and check all contacts to the fuser assembly for continuity.
12	Check inlet sensor lever for sticking or breaking, hopping roller, resist motor, M17-x Board, cover setting state.
13	Check "COVER OPEN STATE", drum motor, clean drum motor and drive gears, M17-x Board. Check gears for proper lubrication.
14	Check exit sensor lever for sticking or breakage, cover setting state, PWU
15	Check M17-x Board.
16	Check paper sensor levers, PWU, M17-x board.

Copyright 1997, Okidata, Division of OKI America, Inc. All rights reserved. See the OKIDATA Business Partner Exchange (BPX) for any updates to this material. (http://bpx.okidata.com)

Abnormal Symptom	Reference Figure	Troubleshooting Flow Chart No.
Images are light or blurred as a whole.	Fig. A	8
The blank background is smeared.	Fig. B	9
Blank paper is output.	Fig. C	10
Black belts or black stripes in vertical direction	Fig. D	11
Periodic abnormal printing.	Fig. E	12
Some parts not printed.	—	13
White belts or some white stripes in vertical direction	Fig. F	14
Poor fusing (Images are blurred or peeled off when touched by hands)	—	15

Sample Image Problems (Figure 7.1.22.1)

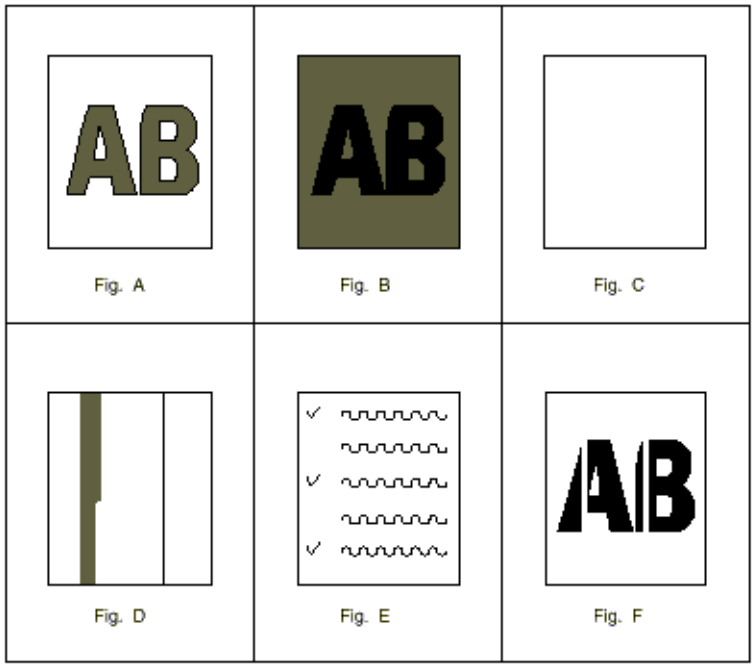

Fig. A Fig. B Fig. C

Fig. D Fig. E Fig. F

Copyright 1997, Okidata, Division of OKI America, Inc. All rights reserved. See the OKIDATA Business Partner Exchange (BPX) for any updates to this material. (http://bpx.okidata.com)

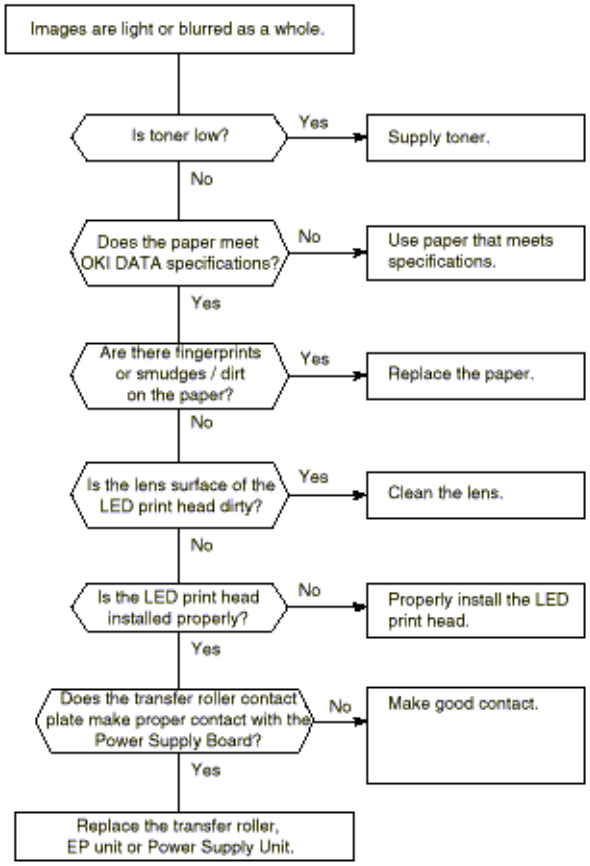

Copyright 1997, Okidata, Division of OKI America, Inc. All rights reserved. See the OKIDATA Business Partner Exchange (BPX) for any updates to this material. (http://bpx.okidata.com)

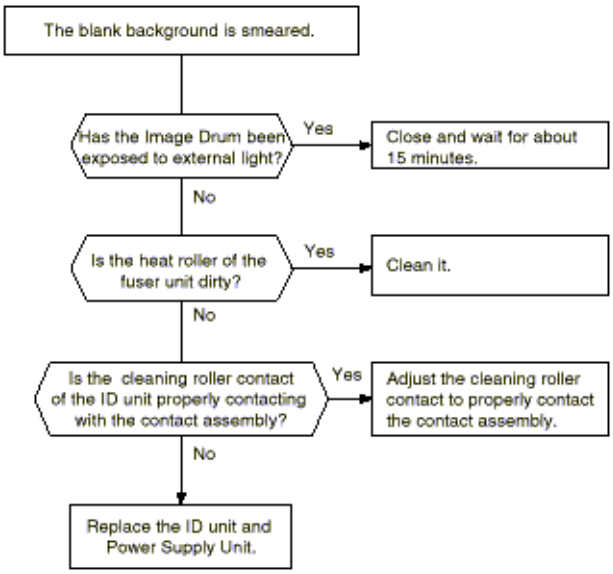

Copyright 1997, Okidata, Division of OKI America, Inc. All rights reserved. See the OKIDATA Business Partner Exchange (BPX) for any updates to this material. (http://bpx.okidata.com)

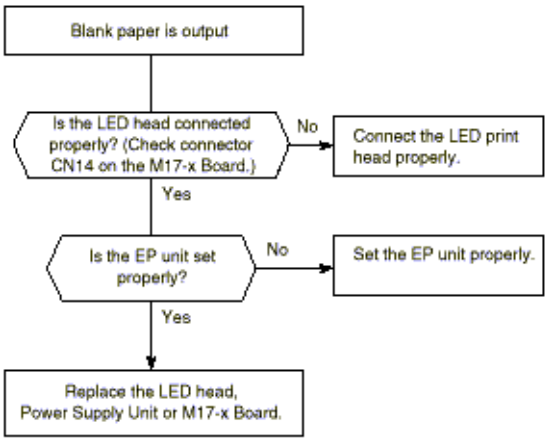

Copyright 1997, Okidata, Division of OKI America, Inc. All rights reserved. See the OKIDATA Business Partner Exchange (BPX) for any updates to this material. (http://bpx.okidata.com)

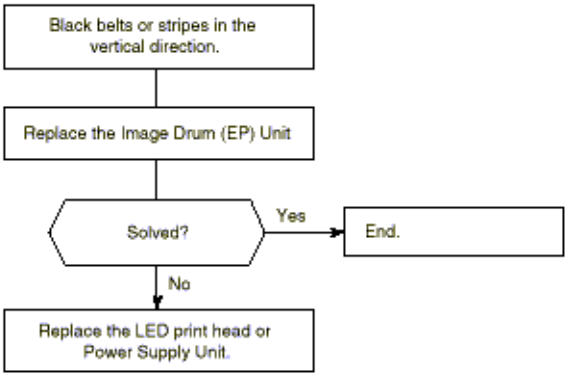

Copyright 1997, Okidata, Division of OKI America, Inc. All rights reserved. See the OKIDATA Business Partner Exchange (BPX) for any updates to this material. (http://bpx.okidata.com)

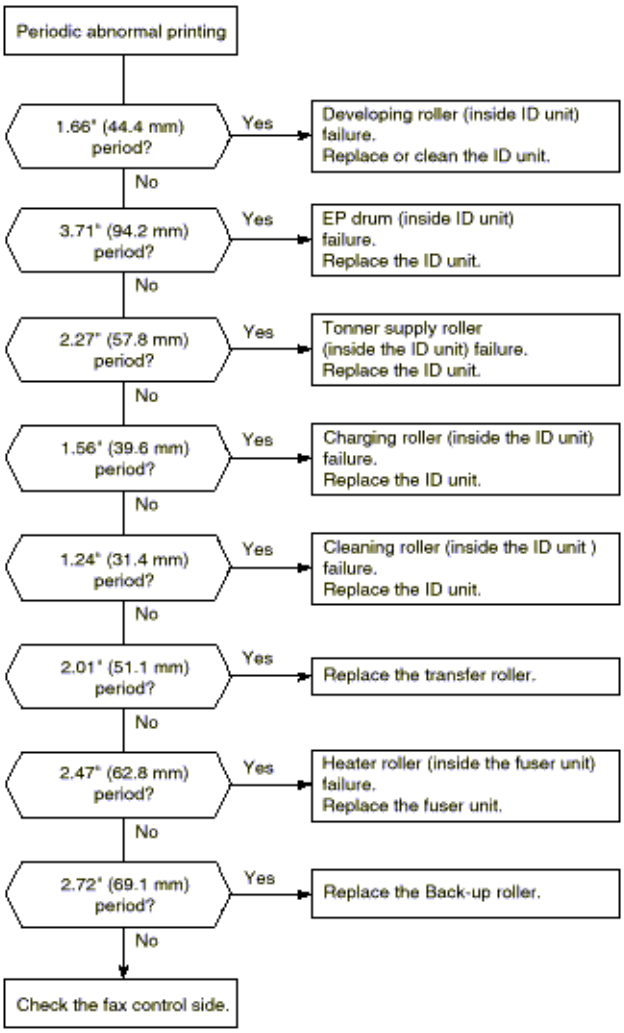

Copyright 1997, Okidata, Division of OKI America, Inc. All rights reserved. See the OKIDATA Business Partner Exchange (BPX) for any updates to this material. (http://bpx.okidata.com)

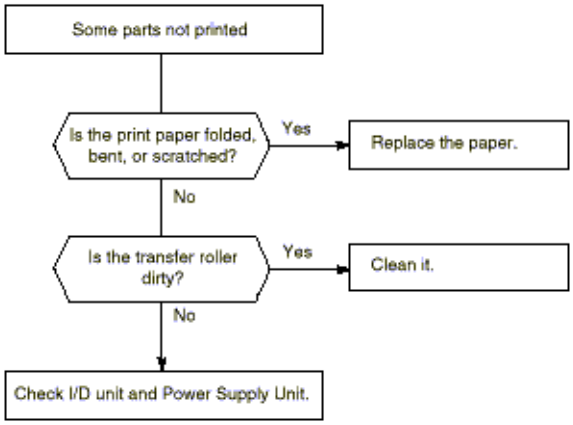

Copyright 1997, Okidata, Division of OKI America, Inc. All rights reserved. See the OKIDATA Business Partner Exchange (BPX) for any updates to this material. (http://bpx.okidata.com)

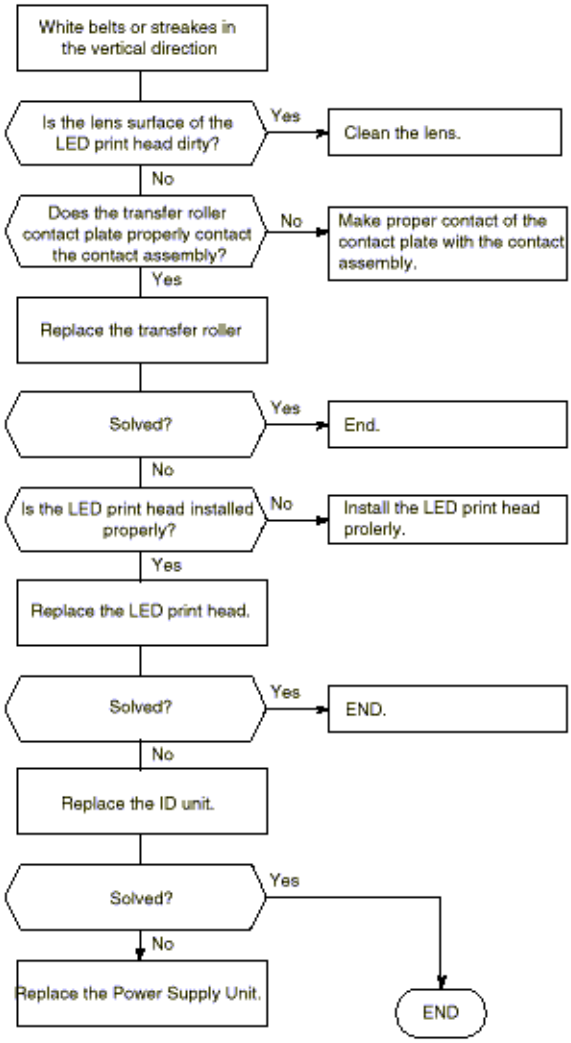

Copyright 1997, Okidata, Division of OKI America, Inc. All rights reserved. See the OKIDATA Business Partner Exchange (BPX) for any updates to this material. (http://bpx.okidata.com)

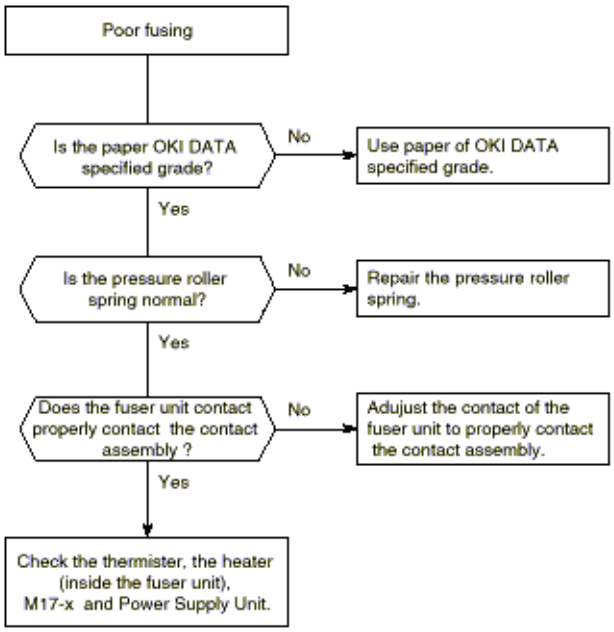

Copyright 1997, Okidata, Division of OKI America, Inc. All rights reserved. See the OKIDATA Business Partner Exchange (BPX) for any updates to this material. (http://bpx.okidata.com)

Service Manual for OF5300/5600

Chapter 8 Dipswitch Settings

The OKIFAX 5300 and OKIFAX 5600 do not have any dipswitches.

Copyright 1997, Okidata, Division of OKI America, Inc. All rights reserved. See the OKIDATA Business Partner Exchange (BPX) for any updates to this material. (http://bpx.okidata.com)

1. The unit configuration is shown below.

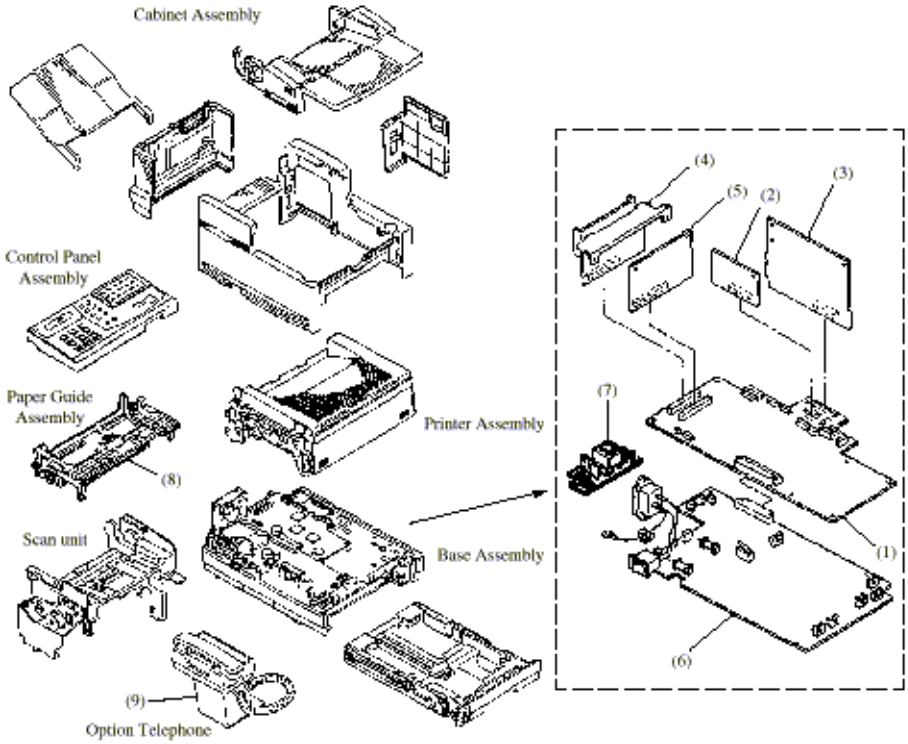

Figure A.1.1.2 Unit Configuration Diagram

(1) Main control board OKIFAX 5300: M17 PCB; OKIFAX 5600: M17

(2) Modem board (MODEM): OKIFAX 5600 only

(3) Network control unit (UNC-5)

(4) PC interface board (CTR): option

(5) Memory board (MEM): option

(6) Power supply unit (1VP: 120V, 2VP: 230V)

(7) Power supply unit (SUB POW)

(8) Operation panel board (05WH)

(9) Optional board

- Telephone interface board (TEL)
- Hook board (HOOK)

Note: Item 7 will be removed from the product in later revisions.

Copyright 1997, Okidata, Division of OKI America, Inc. All rights reserved. See the OKIDATA Business Partner Exchange (BPX) for any updates to this material. (http://bpx.okidata.com)

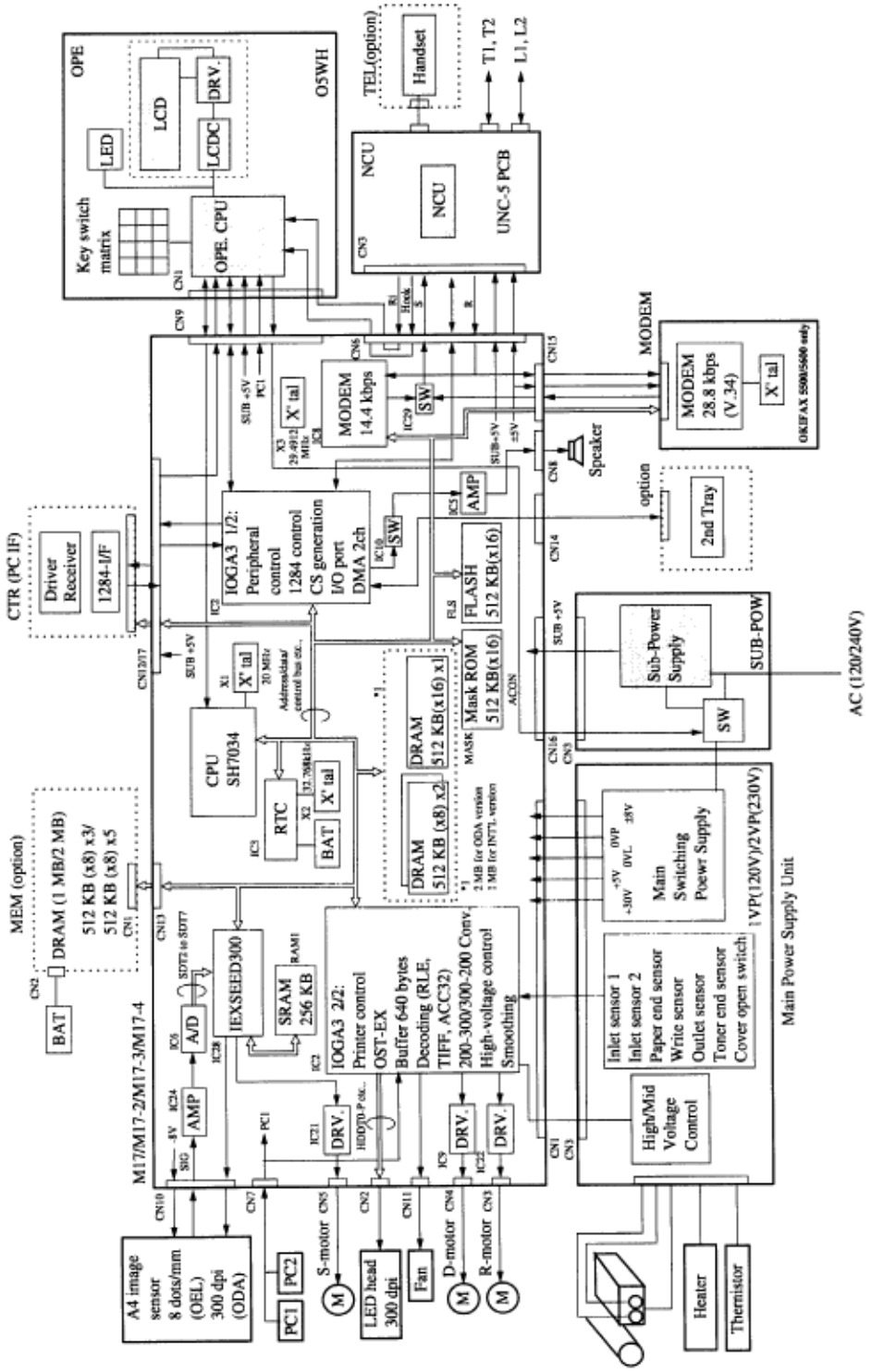

: A circuit which conducted by sub-power supply unit at the time of a standby state.

NOTE:
The sub-power supply assembly will be removed from later revisions of the products.

Copyright 1997, Okidata, Division of OKI America, Inc. All rights reserved. See the OKIDATA Business Partner Exchange (BPX) for any updates to this material. (http://bpx.okidata.com)

A/D	Analog-to-digital converter
AMP	Amplifier
BATT	Battery
CNi	Connector number i
CPU	Central processing unit
D-MOTOR	Drum motor
DRV	Motor drive
DRAM	Dynamic random-access memory
EXSEED	Image processing gate array
FAN	Fan motor
FLASH	Flash memory
IOGA 3	Input output gate array
PCi	Photocoupler number i
POW.UNIT	Power supply unit
PSRAM	Pseudo-SRAM
R-MOTOR	Resist motor
RTC	Real time clock
S-MOTOR	Send motor
SRAM	Static random-access memory
Xtal	Crystal oscillator

Copyright 1997, Okidata, Division of OKI America, Inc. All rights reserved. See the OKIDATA Business Partner Exchange (BPX) for any updates to this material. (http://bpx.okidata.com)

The section describes the principal functions of the individual units of the fax machines electrical sections.

The block diagram is shown in Figure A1.2.2.

(1) OKIFAX 5300: M17 PCB
OKIFAX 5600: M17 PCB

- CPU
  Basic processor
  Scanning control
  Picture processing control
  Printing control
  SIO (Serial input/output) control

- IOGA (Input/output gate array)
  Scanning control
  Printing control
  Peripheral input/output control

- Flash memory (Instead of EP-ROM and SRAM)
  Memory storage for work area.

- DRAM
  Memory storage for ECM operations, memory broadcast, delayed broadcast, etc.

- Back-up battery circuit

- Real-time clock IC

- Audio monitor circuit

- Contact image sensor control

- I EXSEED
  Image data processing

- SRAM
  Memory storage for image picture data

- Supervision of the following external statuses:
  Presence of document on hopper
  Presence of document at scanning position

- Send motor control

- Fan motor control

- Drum motor control

- Resist motor control

- Modem chip/Modem board (For OKIFAX 5600)
  Modulation and demodulation for V.34 (for OKIFAX 5600)
- Modulation and demodulation for V.33 and V.17
  Modulation and demodulation for V.29 and V.27 ter
  Modulation and demodulation for V.21
  Generation of single-frequency signals for tonal signals
  Detection of single-frequency tonal signals
  Generation of dual time multiple-frequency signals for tone dialing

(2) Operation panel unit: 05W board

- Supervision of switches on operation panel
- Control of LEDs on operation panel
- Control of LCD on operation panel
  LED : Light-emitting diode
  LCD : Liquid crystal display

(3) NCU Board (UNC5 PCB)

- Conversion of receive data and receive signals to internal signal level
- Conversion of send data and send signals to external signal level
- Generation of dial pulses to telephone line
- Detection of ringing signal
- Detection of busy tone (conjunction with Modem unit)
- Detection of hook up signal
- Interface with telephone handset (option)
- Output of send data and send signals to telephone line
- Input of receive data and receive signals from telephone line

(4) Power supply unit: SUB-POW board

- Conversion of main alternating current to the following direct currents:
  +5V DC power supply
  +8V DC/-8V DC power supply (+8V for OKIFAX 5300/5600 series)
  +30V DC power supply
- Supplying of main alternating current to fuser unit
- Generation of medium voltages +300V, -300V, +400V, -450V and 0V
- Generation of high voltages -1.35 kV, -0.75 kV and +3.5 kV

(5) MEM (memory) board (Option)

- DRAM
  Memory storage for ECM operations, memory broadcast, delayed broadcast, etc.

(6) CTR board (PC Interface)

- Driver circuits for bi-directional, parallel port

(9) HOOK board (Option)

- Hook switch circuit

10) TELU board (Option):

NOTE: this board is contained within the optional handset.

- Speech network circuit
  Basic speech functions included.

(11) TQSB board (option)

Second paper cassette unit for OKIFAX 5300/5600

- MOS-CPU
- Motor control

Copyright 1997, Okidata, Division of OKI America, Inc. All rights reserved. See the OKIDATA Business Partner Exchange (BPX) for any updates to this material. (http://bpx.okidata.com)

Note: The OKIOFFICE 44 and OKIFAX 5300/5600 machines have very similar signal flows.

The differences are:

The one-line scanning processing speed of OKIFAX 5300/5600 is faster. The EXSEED (image processing LSI) and SRAM (dark/light level correction data) have been added to the OKIFAX 5300/5600 circuits. The OKIOFFICE 44 and OKIFAX 5300/5600 machines have very similar signal flows.

The differences are:

The one-line scanning processing speed of OKIFAX 5300/5600 is faster. The EXSEED (image processing LSI) and SRAM (dark/light level correction data) have been added to the OKIFAX 5300/5600 circuits.

Copyright 1997, Okidata, Division of OKI America, Inc. All rights reserved. See the OKIDATA Business Partner Exchange (BPX) for any updates to this material. (http://bpx.okidata.com)

Figure A2.2.1 shows the picture signal route in local copy mode.

One-line picture data is transferred to A/D converter (analog/digital) via operational amplifier from the scanning unit (CIS: contact image sensor) as an analog data. After conversion from analog data to 6-bit digital data by A/D converter, the picture data is sent to EXSEED (image processing LSI) and SRAM. Here, the picture data undergoes various kinds of picture processings (EXSEED and SRAM), converted to two-level binary data (black and white) and
then sent to IOGA (scanning control). The one-line binary picture data from IOGA is stored into DRAM. When the data for one page has been stored in the DRAM, the data is read out from the DRAM and sent to IOGA. The data is converted into a serial data by the picture control of IOGA and transferred to the LED print head for printing as HDATA. Writing of data into the page memory is also possible during the printing operation.

Copyright 1997, Okidata, Division of OKI America, Inc. All rights reserved. See the OKIDATA Business Partner Exchange (BPX) for any updates to this material. (http://bpx.okidata.com)

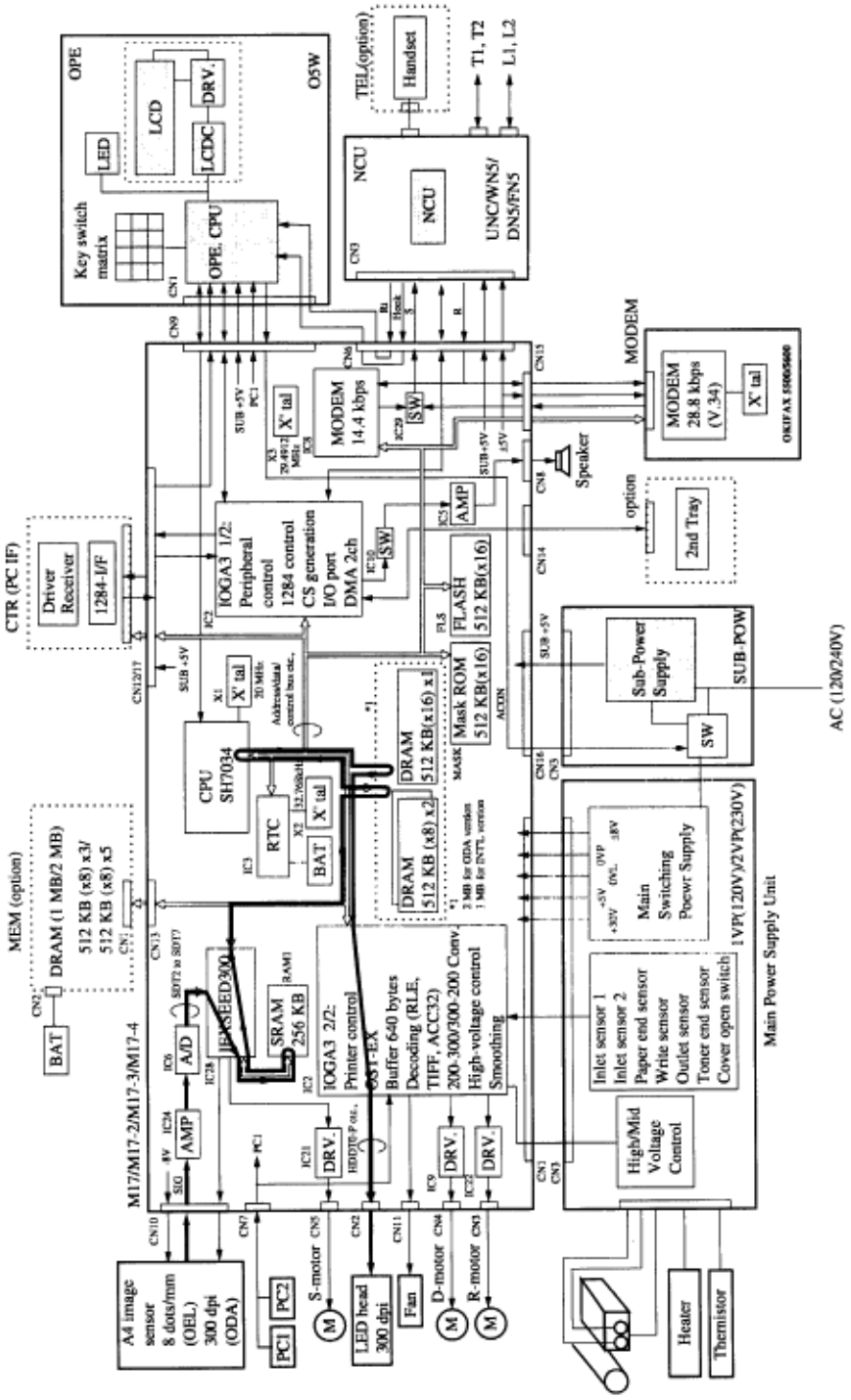
OPE
O5W
LED
LCD
DRV.
LCDC
Key switch matrix
OPE. CPU
TEL(option)
Handset
T1, T2
L1, L2
NCU
UNC/WN5/ DN5/FN5
MODEM
MODEM 28.8 kbps (V.34)
X' tal
MODEM 14.4 kbps
SW
Speaker
option
2nd Tray
CTR (PC IF)
Driver Receiver
1284-I/F
IOGA3 1/2: Peripheral control 1284 control CS generation I/O port DMA 2ch
AMP
FLASH 512 KB(x16)
Mask ROM 512 KB(x16)
Sub-Power Supply
SUB-POW
AC (120/240V)
CPU SH7034
RTC
BAT
DRAM 512 KB(x16) x1
DRAM 512 KB (x8) x2
MEM (option)
DRAM (1 MB/2 MB)
512 KB (x8) x3/
512 KB (x8) x5
Main Switching Poewr Supply
1VP(120V)/2VP(230V)
Main Power Supply Unit
Inlet sensor 1
Inlet sensor 2
Paper end sensor
Write sensor
Outlet sensor
Toner end sensor
Cover open switch
High/Mid Voltage Control
M17/M17-2/M17-3/M17-4
IENSEED300
SRAM 256 KB
A/D
IOGA3 2/2: Printer control
OST-EX
Buffer 640 bytes
Decoding (RLE, TIFF, ACC32)
200-300/300-200 Conv.
High-voltage control
Smoothing
A4 image sensor 8 dots/mm (OEL) 300 dpi (ODA)
PC1
PC2
S-motor
LED head 300 dpi
Fan
D-motor
R-motor
Heater
Thermistor

: A circuit which conducted by sub-power supply unit at the time of a standby state.

Note:
The Sub-Power Supply will be removed from future revisions of the product.

Copyright 1997, Okidata, Division of OKI America, Inc. All rights reserved. See the OKIDATA Business Partner Exchange (BPX) for any updates to this material. (http://bpx.okidata.com)

Figure A2.2.2 shows the G3 send picture signal route

In the G3 mode, the data transfer route from the scan unit up to the DRAM is the same as in the copy mode described in (1).

The picture data for one-line is transferred from DRAM to CPU. The CPU performs the picture data processing (encode) for this picture data (FILLER, fill bits are inserted etc.) and again stores into the DRAM. The stored encoded data is output from DRAM to the MODEM under the control of CPU. After modulation, the picture signal "S" is sent to the NCU board as the transmission data. The transmission data "S" goes through the amplifier and is sent to the telephone line L1 and L2 via the transformer T1 as high speed signal.

Copyright 1997, Okidata, Division of OKI America, Inc. All rights reserved. See the OKIDATA Business Partner Exchange (BPX) for any updates to this material. (http://bpx.okidata.com)

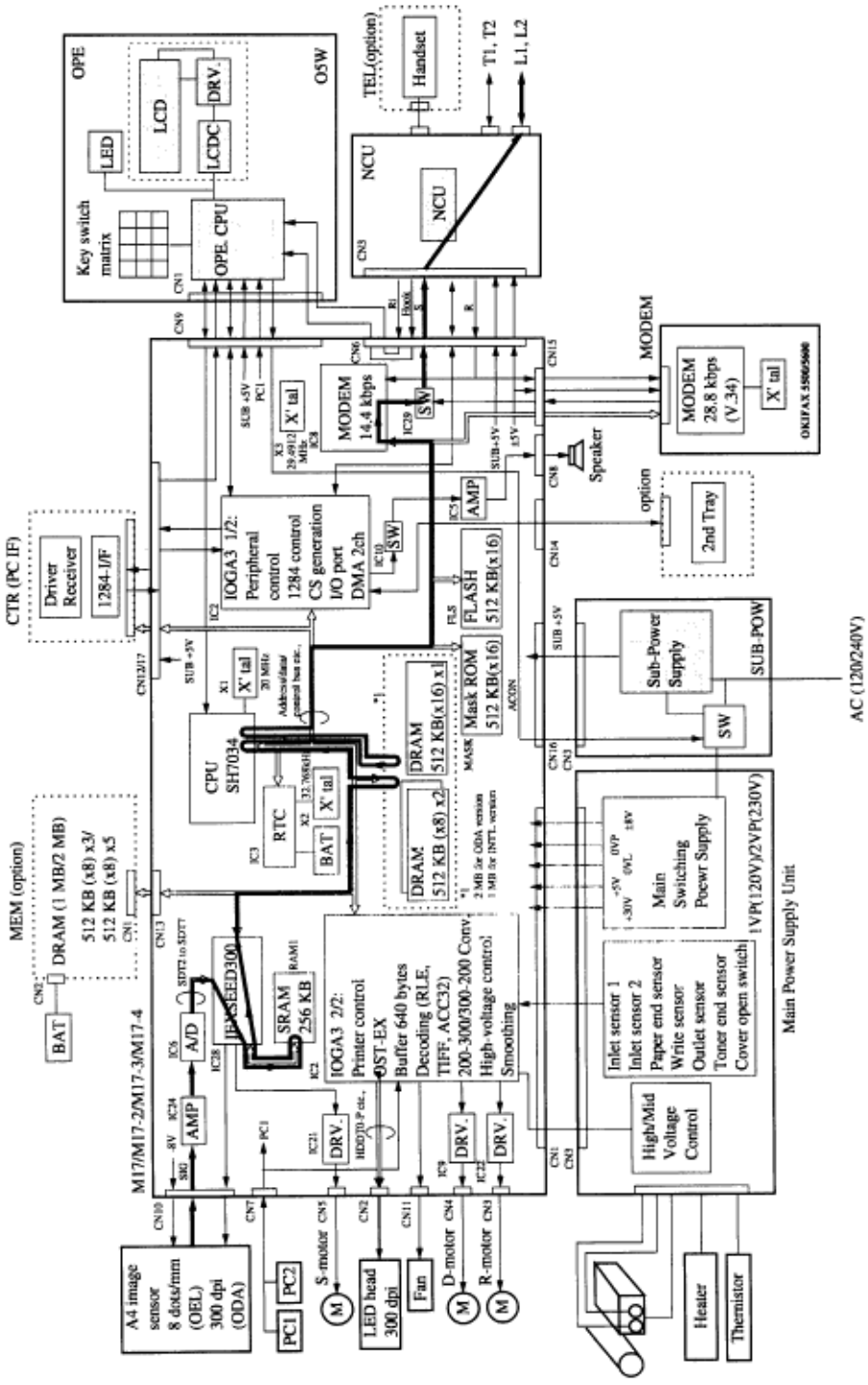
OPE
LED
LCD
DRV.
LCDC
Key switch matrix
OPE. CPU
O5W
TEL(option)
Handset
T1, T2
L1, L2
NCU
NCU
MODEM
MODEM 14.4 kbps
MODEM 28.8 kbps (V.34)
X' tal
Speaker
option
2nd Tray
AMP
FLASH 512 KB(x16)
Mask ROM 512 KB(x16)
DRAM 512 KB(x16) x1
DRAM 512 KB (x8) x2
CPU SH7034
RTC
BAT
IOGA3 1/2: Peripheral control 1284 control CS generation I/O port DMA 2ch
IOGA3 2/2: Printer control OST-EX Buffer 640 bytes Decoding (RLE, TIFF, ACC32) 200-300/300-200 Conv High-voltage control Smoothing
SRAM 256 KB
A/D
AMP
DRV.
Driver Receiver
1284-I/F
CTR (PC IF)
MEM (option)
DRAM (1 MB/2 MB)
512 KB (x8) x3/
512 KB (x8) x5
M17/M17-2/M17-3/M17-4
Sub-Power Supply
SUB-POW
SW
AC (120/240V)
Main Switching Poewr Supply
Main Power Supply Unit
Inlet sensor 1
Inlet sensor 2
Paper end sensor
Write sensor
Outlet sensor
Toner end sensor
Cover open switch
High/Mid Voltage Control
A4 image sensor 8 dots/mm (OEL) 300 dpi (ODA)
LED head 300 dpi
Fan
S-motor
D-motor
R-motor
Heater
Thermistor

: A circuit which conducted by sub-power supply unit at the time of a standby state.

Note:
The Sub-Power Supply will be removed from future revisions of the product.

Copyright 1997, Okidata, Division of OKI America, Inc. All rights reserved. See the OKIDATA Business Partner Exchange (BPX) for any updates to this material. (http://bpx.okidata.com)

Figure A2.2.3 shows the G3 receive picture signal route

In the G3 mode, the high-speed picture signal arriving from the telephone line at L1 and L2 of NCU passes through the transformer T1 and the amplifier and is input to the MODEM as "R" signal. After demodulation by modem, the picture data is sent to CPU. The CPU performs the picture data processing (decode) for this picture data and stores into the DRAM. Then, the stored picture data is again written into DRAM (as a page memory) by the picture processing control of CPU. When the data for one page has been stored in the DRAM/P-SRAM, the data is read out from the DRAM and
sent to IOGA. The picture data is converted into a signal data by the printer control of IOGA and transferred to the LED print head for printing as HDATA 0/1.

Copyright 1997, Okidata, Division of OKI America, Inc. All rights reserved. See the OKIDATA Business Partner Exchange (BPX) for any updates to this material. (http://bpx.okidata.com)

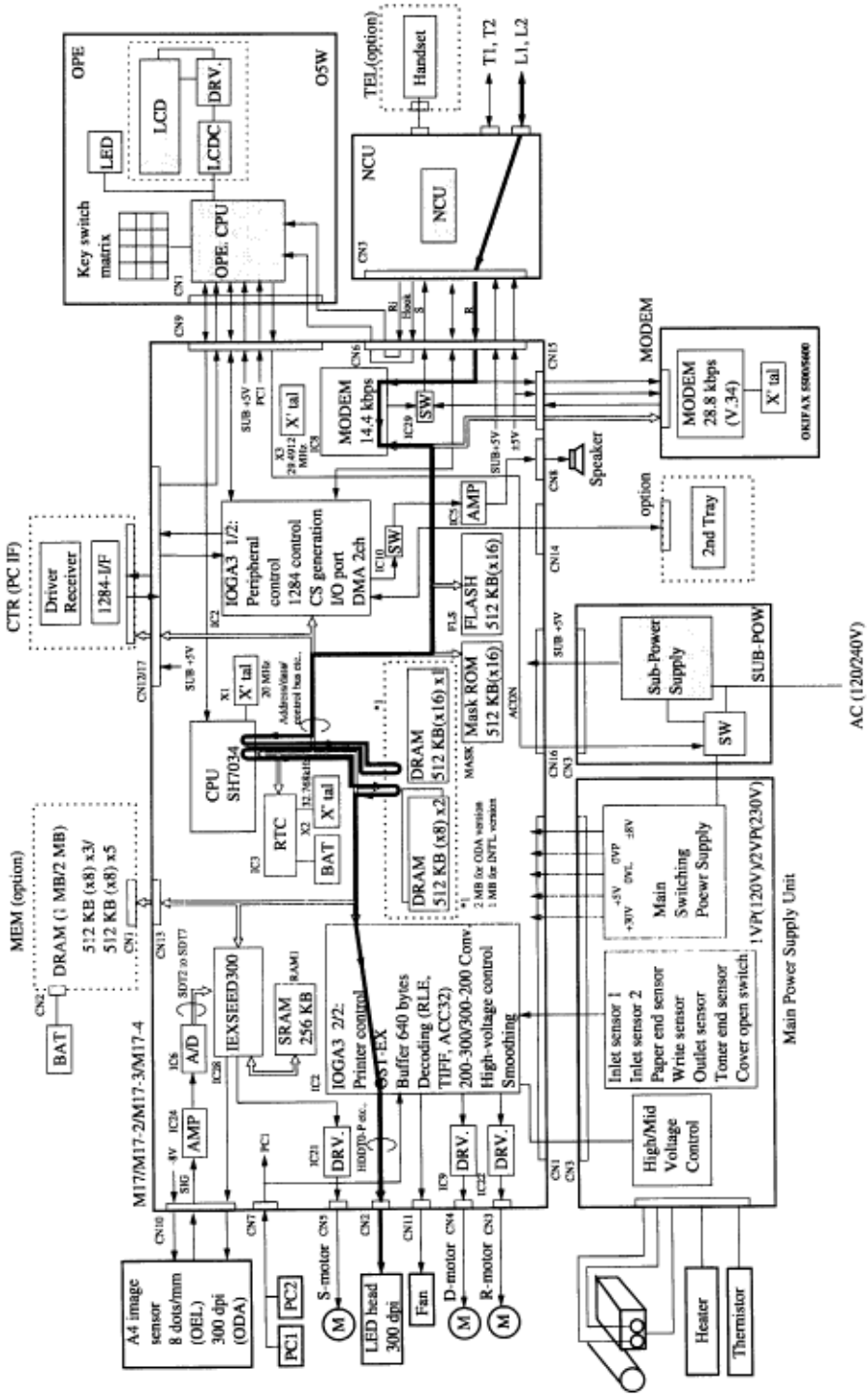
OPE
LED
LCD
DRV.
LCDC
Key switch matrix
OPE. CPU
O5W
TEL(option)
Handset
T1, T2
L1, L2
NCU
NCU
MODEM
MODEM 14.4 kbps
MODEM 28.8 kbps (V.34)
X'tal
Speaker
option
2nd Tray
CTR (PC IF)
Driver Receiver
1284-I/F
IOGA3 1/2: Peripheral control 1284 control CS generation I/O port DMA 2ch
AMP
SW
FLASH 512 KB(x16)
Mask ROM 512 KB(x16)
DRAM 512 KB(x16) x1
DRAM 512 KB (x8) x2
CPU SH7034
RTC
BAT
Sub-Power Supply
SUB-POW
AC (120/240V)
MEM (option)
DRAM (1 MB/2 MB)
512 KB (x8) x3/
512 KB (x8) x5
M17/M17-2/M17-3/M17-4
IEXSEED300
A/D
SRAM 256 KB
IOGA3 2/2: Printer control
ESTEX
Buffer 640 bytes
Decoding (RLE, TIFF, ACC32)
200-300/300-200 Conv
High-voltage control
Smoothing
DRV.
Main Switching Poewr Supply
Inlet sensor 1
Inlet sensor 2
Paper end sensor
Write sensor
Outlet sensor
Toner end sensor
Cover open switch
High/Mid Voltage Control
Main Power Supply Unit
A4 image sensor 8 dots/mm (OEL) 300 dpi (ODA)
PC1
PC2
S-motor
LED head 300 dpi
Fan
D-motor
R-motor
Heater
Thermistor

: A circuit which conducted by sub-power supply unit at the time of a standby state.

Note:
The Sub-Power Supply will be removed from future revisions of the product.

Copyright 1997, Okidata, Division of OKI America, Inc. All rights reserved. See the OKIDATA Business Partner Exchange (BPX) for any updates to this material. (http://bpx.okidata.com)

Figure A2.2.4 shows the 300bps send protocol signal route

In G3 communication, this is the route of the procedural control signals (pre-message, post-message phases etc.) at 300bps.

The protocol send data is read into DRAM in the sequence the contents of various data stored in the FLASH memory area in advance under the control of CPU. The contents of the frame has been edited on the DRAM by CPU and sent to MODEM via CPU. HDLC (high level data link control) frame of the data is structured by the modem and converted to serial data in synchrony with the modem's DCLK (data clock). After modulation, the protocol signal is output from "S" of
the modem and sent to the telephone line L1 and L2 via the transformer T1 of NCU.

Copyright 1997, Okidata, Division of OKI America, Inc. All rights reserved. See the OKIDATA Business Partner Exchange (BPX) for any updates to this material. (http://bpx.okidata.com)

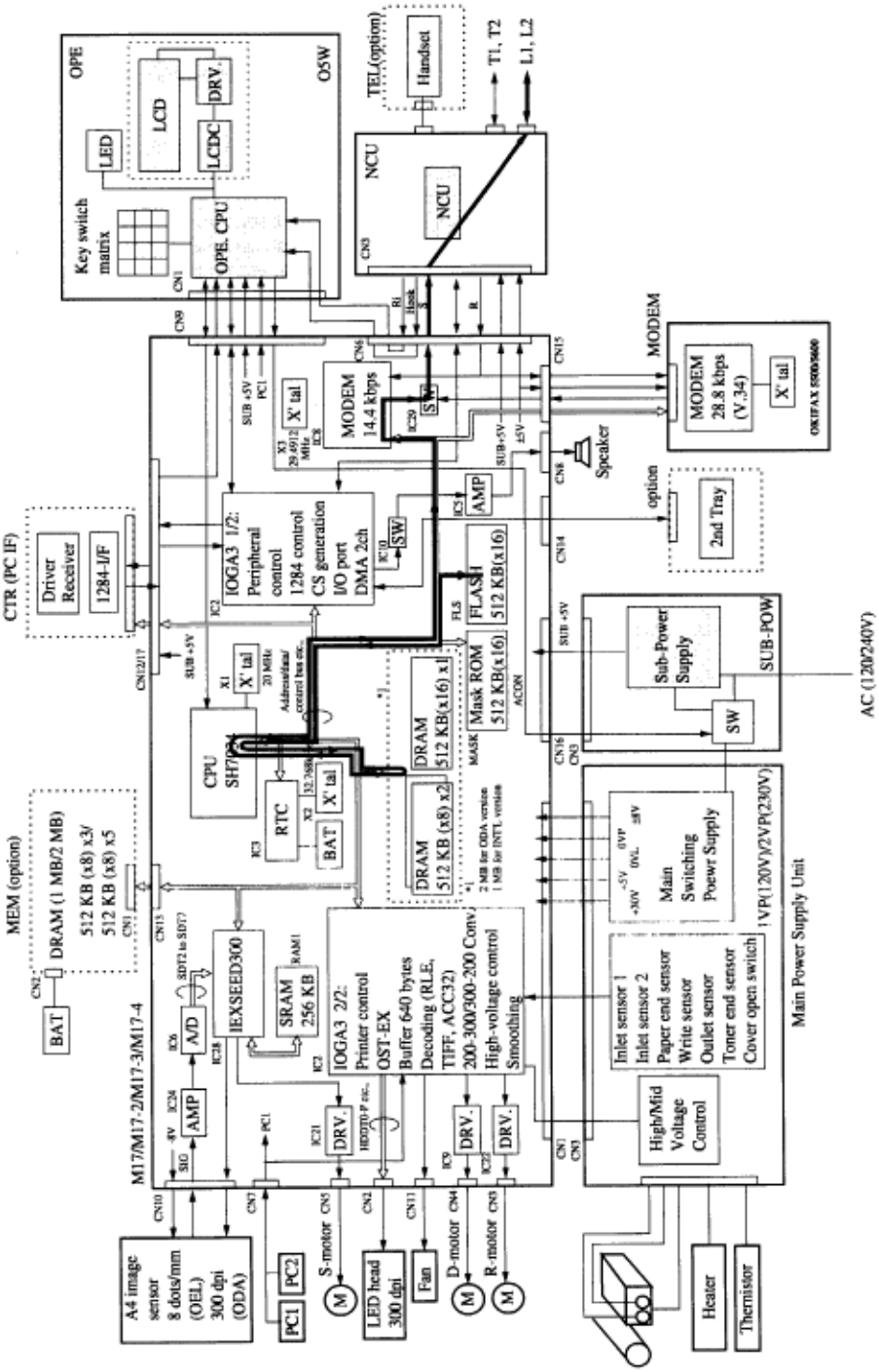
OPE
O5W
LED
LCD
DRV.
LCDC
Key switch matrix
OPE, CPU
TEL(option)
Handset
T1, T2
L1, L2
NCU
MODEM
MODEM 14.4 kbps
MODEM 28.8 kbps (V.34)
X' tal
Speaker
option
2nd Tray
CTR (PC IF)
Driver Receiver
1284-I/F
IOGA3 1/2: Peripheral control 1284 control CS generation I/O port DMA 2ch
AMP
SW
FLASH 512 KB(x16)
Mask ROM 512 KB(x16)
Sub-Power Supply
SUB-POW
AC (120/240V)
CPU SH7034
RTC
BAT
DRAM 512 KB(x16) x1
DRAM 512 KB (x8) x2
MEM (option)
DRAM (1 MB/2 MB)
512 KB (x8) x3/ 512 KB (x8) x5
IEXSEED300
SRAM 256 KB
A/D
IOGA3 2/2: Printer control OST-EX Buffer 640 bytes Decoding (RLE, TIFF, ACC32) 200-300/300-200 Conv High-voltage control Smoothing
Main Switching Poewr Supply
1VP(120V)/2VP(230V)
Main Power Supply Unit
Inlet sensor 1
Inlet sensor 2
Paper end sensor
Write sensor
Outlet sensor
Toner end sensor
Cover open switch
High/Mid Voltage Control
M17/M17-2/M17-3/M17-4
A4 image sensor 8 dots/mm (OEL) 300 dpi (ODA)
PC1
PC2
S-motor
LED head 300 dpi
Fan
D-motor
R-motor
Heater
Thermistor

: A circuit which conducted by sub-power supply unit at the time of a standby state.

Note:
The Sub-Power Supply will be removed from future revisions of the product.

Copyright 1997, Okidata, Division of OKI America, Inc. All rights reserved. See the OKIDATA Business Partner Exchange (BPX) for any updates to this material. (http://bpx.okidata.com)

Figure A2.2.5 shows the 300bps receive protocol signal route.

In G3 communication, this is the route of the procedural control signals (pre-message, post-message phases etc.) at 300bps.

The 300bps modulated signals received via the telephone line L1 and L2 of the NCU are sent from pin R to Pin RXA1 of the modem. After demodulation by the modem, the demodulated digital signals are sent to the CPU via the data bus from the modem. The data is read and decoded by the CPU and written into the DRAM. The written data is interpreted according to bit assignment of the binary procedural signals in the ITU recommendations. The successive modes
of communication (for example, line density, encoding scheme, etc.) are determined.

Copyright 1997, Okidata, Division of OKI America, Inc. All rights reserved. See the OKIDATA Business Partner Exchange (BPX) for any updates to this material. (http://bpx.okidata.com)

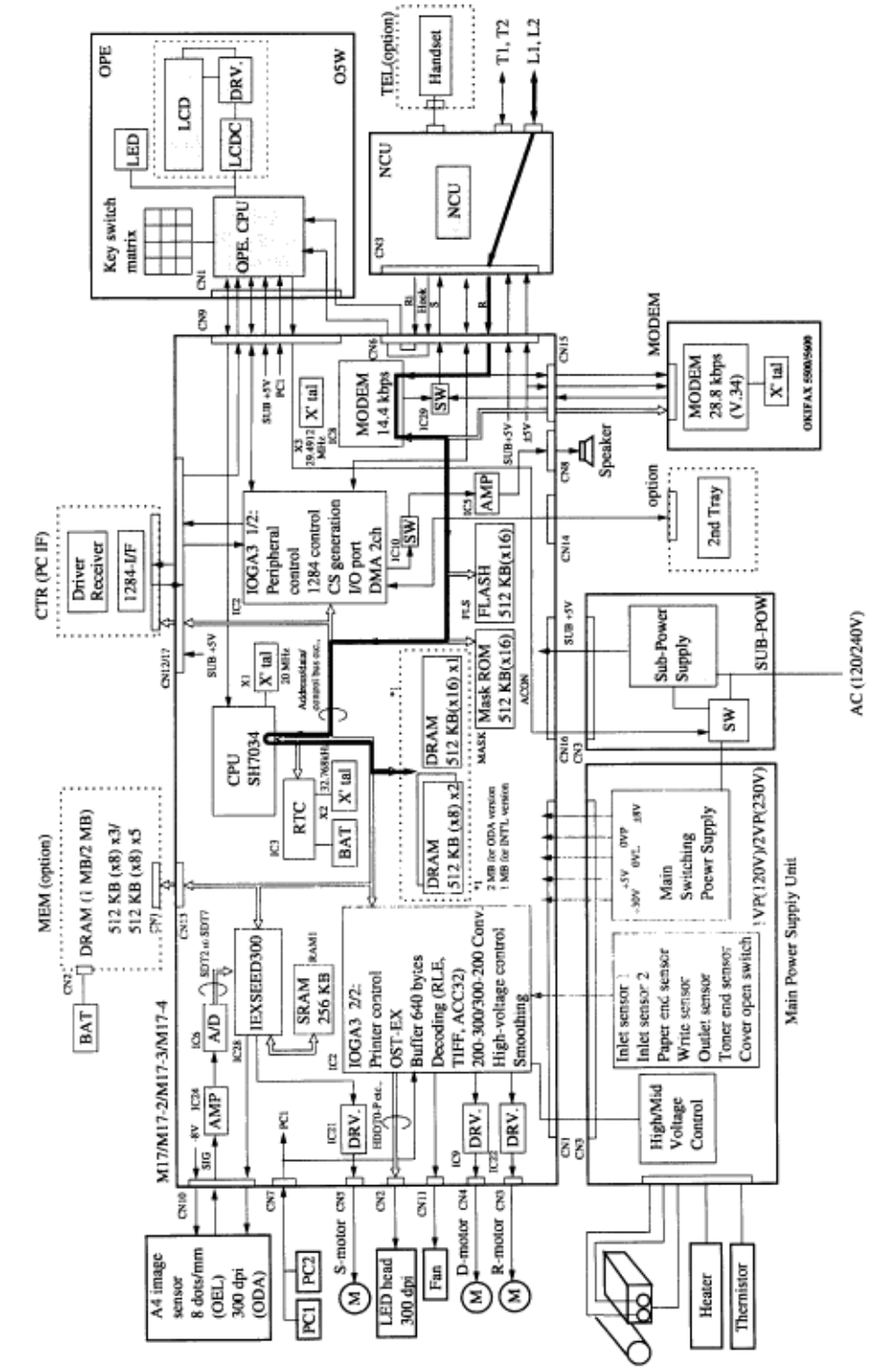

: A circuit which conducted by sub-power supply unit at the time of a standby state.

Note:
The Sub-Power Supply will be removed from future revisions of the product.

Copyright 1997, Okidata, Division of OKI America, Inc. All rights reserved. See the OKIDATA Business Partner Exchange (BPX) for any updates to this material. (http://bpx.okidata.com)

Figure A2.2.6 shows the Report Print Signal route.

This signal route describes the printing route of character data used to print Activity Report, Message Confirmation Report, etc.

The report data is read into DRAM in the sequence the contents of data stored in the FLASH memory in advance under the control of CPU. The contents of data is edited on the DRAM. The data is read out from the DRAM and sent to IOGA. The data is converted into a serial data by the picture control of IOGA and transferred to the LED print head for printing as HDATA 0/1.

Copyright 1997, Okidata, Division of OKI America, Inc. All rights reserved. See the OKIDATA Business Partner Exchange (BPX) for any updates to this material. (http://bpx.okidata.com)

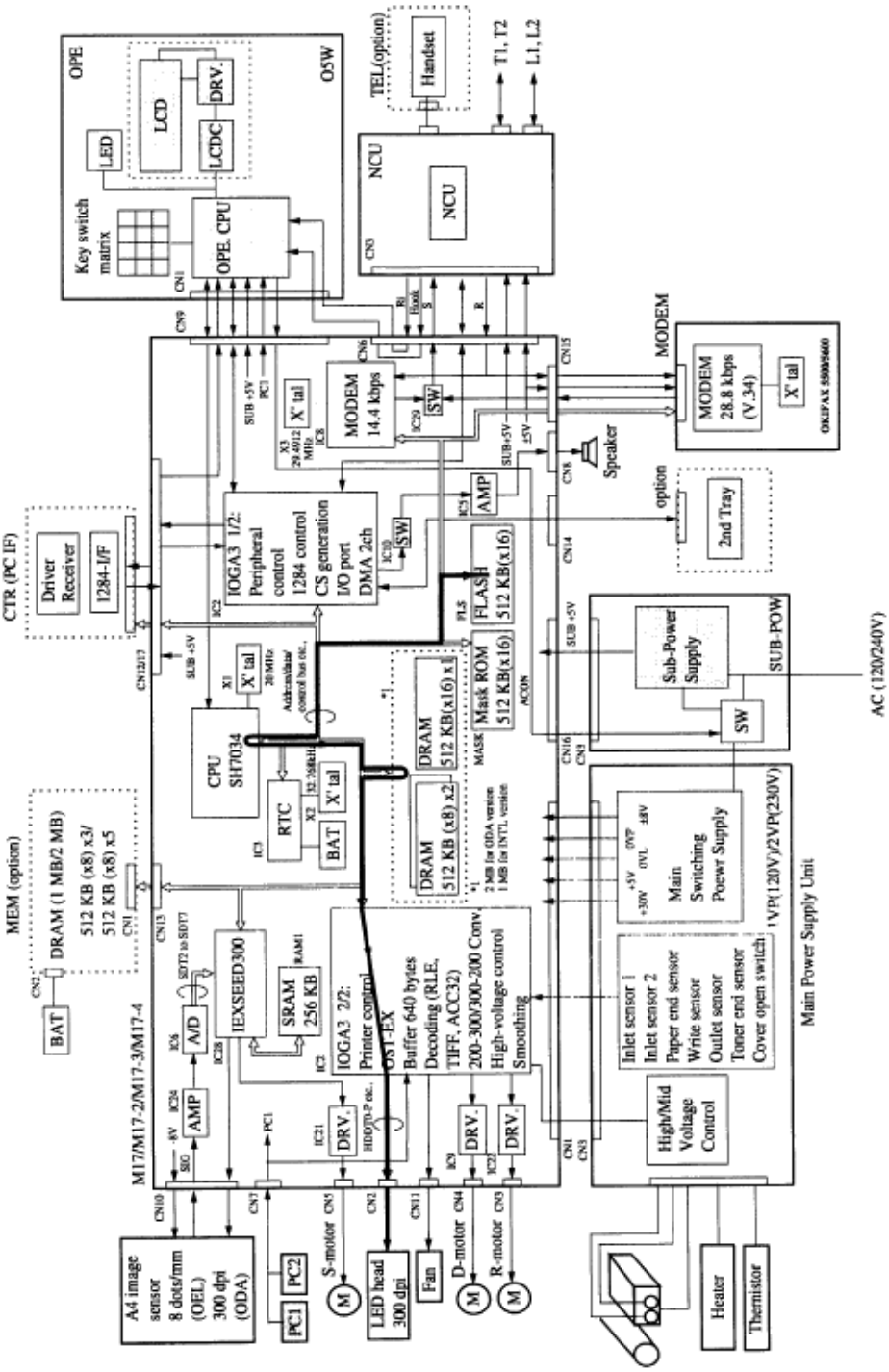
OPE
O5W
LED
LCD
DRV.
LCDC
Key switch matrix
OPE. CPU
CN1
TEL(option)
Handset
T1, T2
L1, L2
NCU
NCU
CN3
MODEM
MODEM 28.8 kbps (V.34)
X'tal
MODEM 14.4 kbps
SW
Speaker
AMP
option
2nd Tray
CTR (PC IF)
Driver Receiver
1284-I/F
IOGA3 1/2: Peripheral control 1284 control CS generation I/O port DMA 2ch
FLASH 512 KB(x16)
Mask ROM 512 KB(x16)
DRAM 512 KB(x16) x1
DRAM 512 KB (x8) x2
CPU SH7034
RTC
BAT
SUB-POW
Sub-Power Supply
SW
AC (120/240V)
MEM (option)
DRAM (1 MB/2 MB)
512 KB (x8) x3/
512 KB (x8) x5
IEXSEED300
SRAM 256 KB
A/D
AMP
IOGA3 2/2: Printer control OST-EX Buffer 640 bytes Decoding (RLE, TIFF, ACC32) 200-300/300-200 Conv. High-voltage control Smoothing
Main Switching Poewr Supply
Inlet sensor 1
Inlet sensor 2
Paper end sensor
Write sensor
Outlet sensor
Toner end sensor
Cover open switch
High/Mid Voltage Control
Main Power Supply Unit
M17/M17-2/M17-3/M17-4
A4 image sensor 8 dots/mm (OEL) 300 dpi (ODA)
PC1
PC2
S-motor
LED head 300 dpi
Fan
D-motor
R-motor
Heater
Thermistor

: A circuit which conducted by sub-power supply unit at the time of a standby state.

Note:
The Sub-Power Supply will be removed from future revisions of the product.

Copyright 1997, Okidata, Division of OKI America, Inc. All rights reserved. See the OKIDATA Business Partner Exchange (BPX) for any updates to this material. (http://bpx.okidata.com)

This signal route describes the memory transmission used in broadcast mode, delayed broadcast mode, etc.

The stored encoded data undergoes buffering, passes through CPU, MODEM and NCU and then sent out to the telephone line.

Copyright 1997, Okidata, Division of OKI America, Inc. All rights reserved. See the OKIDATA Business Partner Exchange (BPX) for any updates to this material. (http://bpx.okidata.com)

This signal route describes the memory reception used in no-paper mode, no-toner reception, confidential mode, etc.

Copyright 1997, Okidata, Division of OKI America, Inc. All rights reserved. See the OKIDATA Business Partner Exchange (BPX) for any updates to this material. (http://bpx.okidata.com)

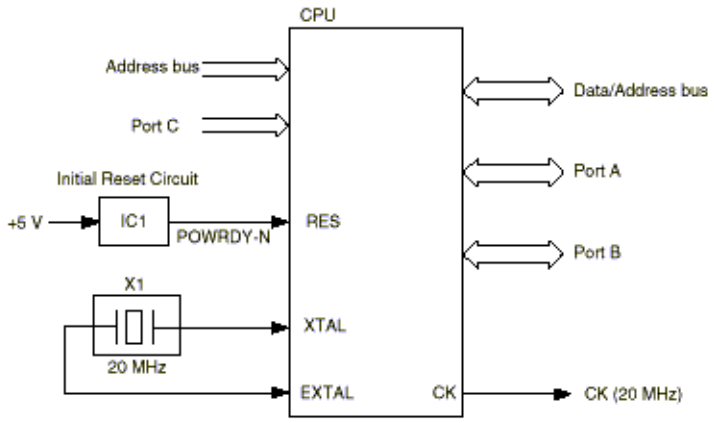

Copyright 1997, Okidata, Division of OKI America, Inc. All rights reserved. See the OKIDATA Business Partner Exchange (BPX) for any updates to this material. (http://bpx.okidata.com)

Copyright 1997, Okidata, Division of OKI America, Inc. All rights reserved. See the OKIDATA Business Partner Exchange (BPX) for any updates to this material. (http://bpx.okidata.com)

1. Block diagram

The circuit diagram consists of a CPU, crystal oscillator circuit and reset signal generator.

Figure A3.2.1 shows the block diagram of CPU and the peripheral circuits.

2. Function

1) Crystal oscillator circuit

X1 is a 20 MHz crystal ocillator. The output wave is fed to the CPU through pins 73 and 74.

CLK (20MHz) signal output from pin 71 is used as the system clock and output to IC2

(IOGA3: input/output gate array) IC20 (IEXCEED) and CTR board.

2) CPU

CPU controls the following functions in addition to the basic processor.

- Scanning control
- Picture processing control
- Printing control
- Serial communication interface (SCI)
- DMA (direct memory access) control
- Interrupt procedure control
- A/D converter
- Programmable pattern control
- 16 bit integrated timer pulse unit (ITU)
- Timing pattern control (TPC)

Copyright 1997, Okidata, Division of OKI America, Inc. All rights reserved. See the OKIDATA Business Partner Exchange (BPX) for any updates to this material. (http://bpx.okidata.com)

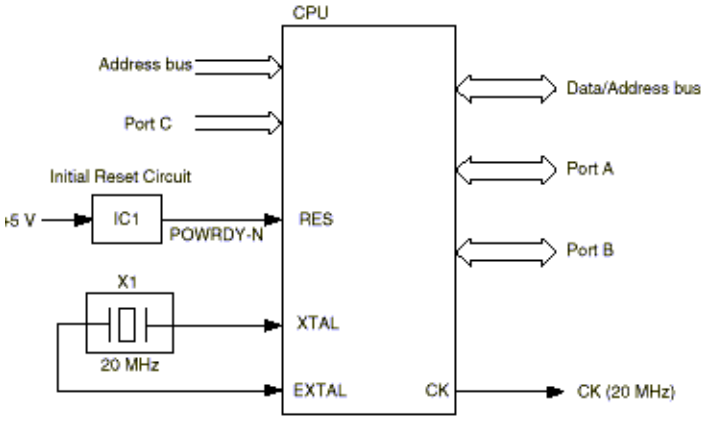

Copyright 1997, Okidata, Division of OKI America, Inc. All rights reserved. See the OKIDATA Business Partner Exchange (BPX) for any updates to this material. (http://bpx.okidata.com)

1. Block diagram

The circuit diagram consists of an input/output gate array IC2 (IOGA3).

Figure A3.2.2 shows the related signals of IOGA3.

2. Functions

IOGA3 is newly developed LSI for scanning and printing control of OKIFAX 5000 series.

IOGA3 contains the following functions:

- Strobe signals control for LED head
- Smoothing control for printing data
- Interface of the peripheral LSI and CPU

3. Others

1) The route to transfer print data to the LED head is follows:

- Data bus route: RX, Memory, Report mode, etc.

2) System clock (CLK) is divided by IOGA3 and these divided clocks are transferred to the IEXSEED (IC20), LED head and 2'nd tray.

Copyright 1997, Okidata, Division of OKI America, Inc. All rights reserved. See the OKIDATA Business Partner Exchange (BPX) for any updates to this material. (http://bpx.okidata.com)

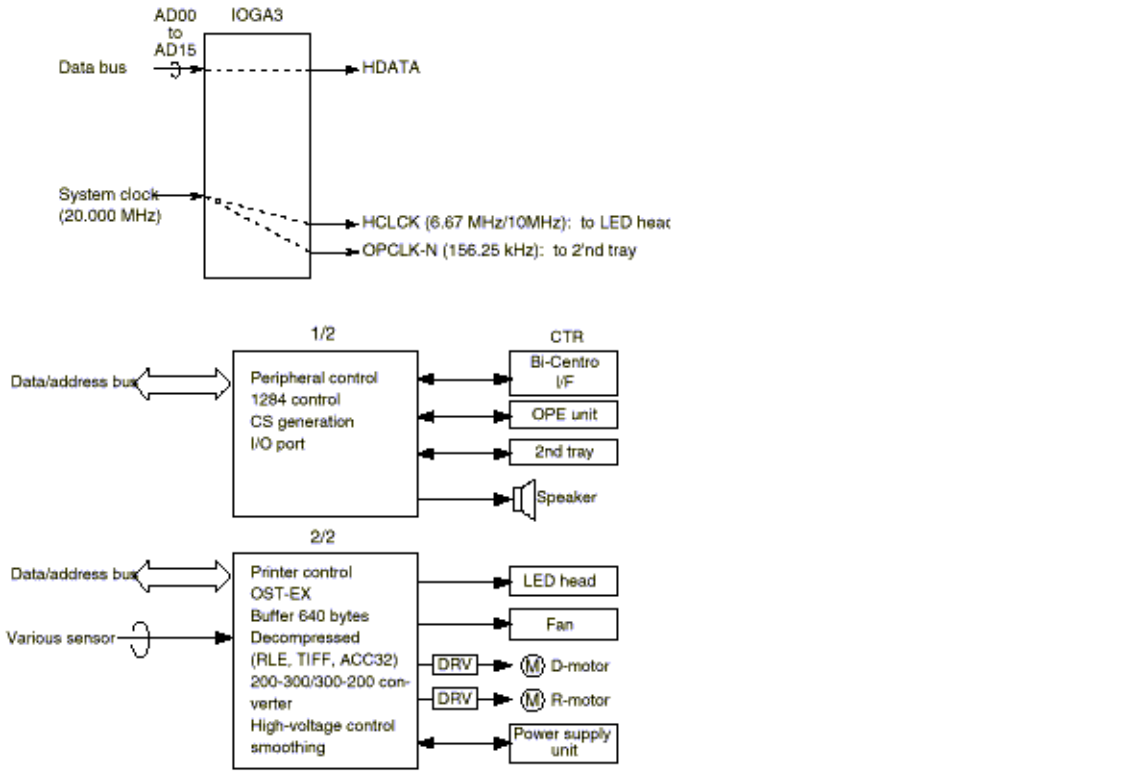

Copyright 1997, Okidata, Division of OKI America, Inc. All rights reserved. See the OKIDATA Business Partner Exchange (BPX) for any updates to this material. (http://bpx.okidata.com)

1. Block diagram

The circuit diagram consists of Flash memory, Mask ROM, IC3 (Real time clock IC) and Back up battery circuit.

Fig. A3.2.3 shows the block diagram of Flash memory, Mask ROM and Real time clock.

2. Function

1) Flash memory (FLS)

Flash memory (electrically erasable and programmable device) is used for the main software program which is stored in EP-ROM of the current OKIFAX. Other than the function of EP-ROM, Flash memory is also used for the user data area
instead of SRAM chips.

- 512 KByte Flash memory x 1 (FLS)

Used for work area, report recording etc.

2) Back-up battery circuit

- Non-rechargeable lithium for RTC-IC (real-time clock IC)

3) Real-time clock IC (IC3)

IC3 is a real-time clock IC used as a timepiece to display the data and time in year, month, day, hour, minute, and second units. Its input/output signals are the 4-bit data bus (AD00 - AD03), 4-bit address bus (A01 - A04) and the control signals PRDY0, RTCCS, MDMRD-N and RTCWR-N which perform a CPU-controlled read operation (M/D/Y H:M, Data read) and write operation (M/D/Y H:M, Data setting).

4) MASK

- 512 KByte Flash memory or Mask ROM x 1 (MASK)

Used for program storage

Copyright 1997, Okidata, Division of OKI America, Inc. All rights reserved. See the OKIDATA Business Partner Exchange (BPX) for any updates to this material. (http://bpx.okidata.com)

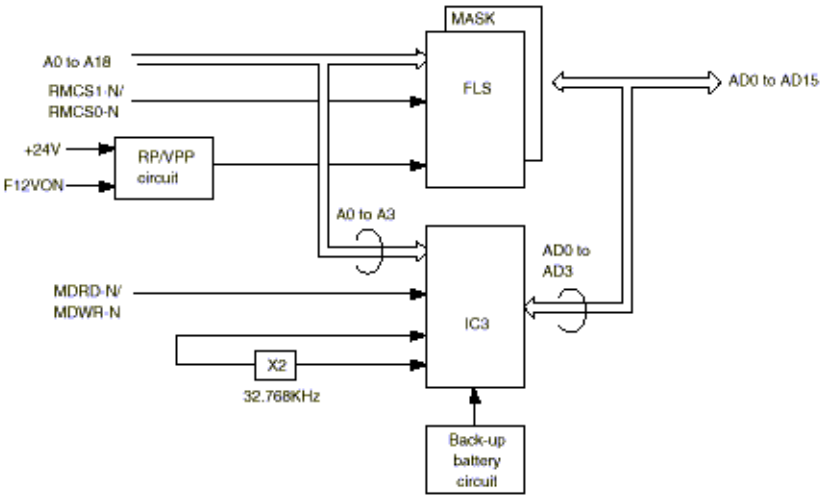

Copyright 1997, Okidata, Division of OKI America, Inc. All rights reserved. See the OKIDATA Business Partner Exchange (BPX) for any updates to this material. (http://bpx.okidata.com)

1. Block diagram

The audio monitor circuit consists of IC11 (analog switch IC) and IC5 (amplifier) generates the following audio monitor.

- Line monitoring
- Buzzer signals

Figure A3.2.4 shows the block diagram of audio monitor circuit.

2. Function

1) Line monitoring
Send and receive signals are input from the transformer on the NCU board to this circuit as RM signal and the signal power is input to the IC11. The IC11 adjusts the monitor volume by MONC0, MONC1 and MONC2 signal under the control of IOGA3. Output (high and low) from IC11 passes through the amplifier and fed to the speaker as a SP signal.

- MONC0/MONC1/MONC2 signal : Volume control signal.

Note: In case of transmission mode, the monitor will be available during dialing, but the monitor will be switched off automatically after the elapse of specified time (about 5 sec).

2) Buzzer control

Alarm and other signals (key touch etc.) are input from CPU to this circuit as BZ signal. The various buzzer signals are sounded under the control of CPU.

Copyright 1997, Okidata, Division of OKI America, Inc. All rights reserved. See the OKIDATA Business Partner Exchange (BPX) for any updates to this material. (http://bpx.okidata.com)

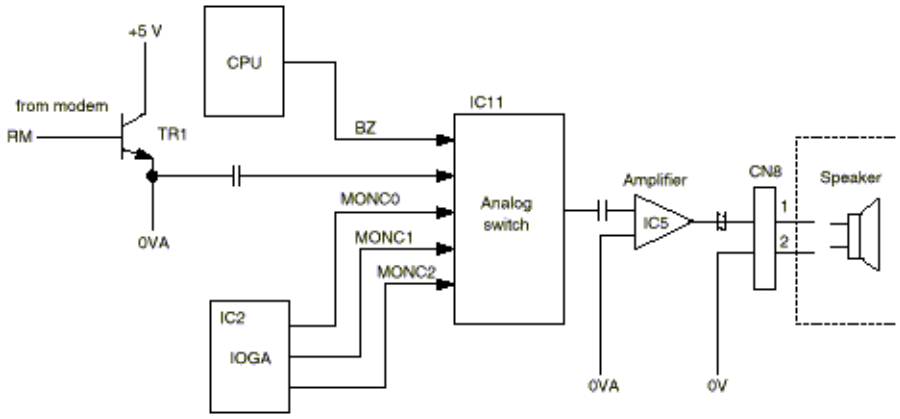

Copyright 1997, Okidata, Division of OKI America, Inc. All rights reserved. See the OKIDATA Business Partner Exchange (BPX) for any updates to this material. (http://bpx.okidata.com)

1. Block diagram

The circuit diagram consists of the following function:

- IC6 (A/D converter) and amplifier
- 30 V/24 V conversion circuit
- Connector CN10 that provides an interface between M17 board and CIS (contact image sensor).

Figure A3.2.5 shows the related signals and block diagram of CIS.

2. Function

One-line picture data is read in the sequence from the scanning unit (CIS) as SIG signal (analog data) to A/D converter (analog/digital converter) of IC6 via amplifier. After conversion from analog data to 6-bit digital signal (SDT2 - SDT7) under the control of IC6, the picture data is sent to EXSEED (scanning control LSI) of IC20. Here, the picture data undergoes various kinds of picture processings.

Sensor interface signal output from EXSEED.

- LEDON : LED on/off control signal
- PDCK : Scanning sensor drive clock (1.25MHz for ODA/833KHz for INT'L)
- MISP : Scanning synchronous signal (2.5 msec)
- ADCLK: Sampling clock for A/D converter (1.25MHz for ODA/833KHz for INT'L)

Copyright 1997, Okidata, Division of OKI America, Inc. All rights reserved. See the OKIDATA Business Partner Exchange (BPX) for any updates to this material. (http://bpx.okidata.com)

OKIDATA®

Service Manual for OF5300/5600

Chapter A Board Descriptions

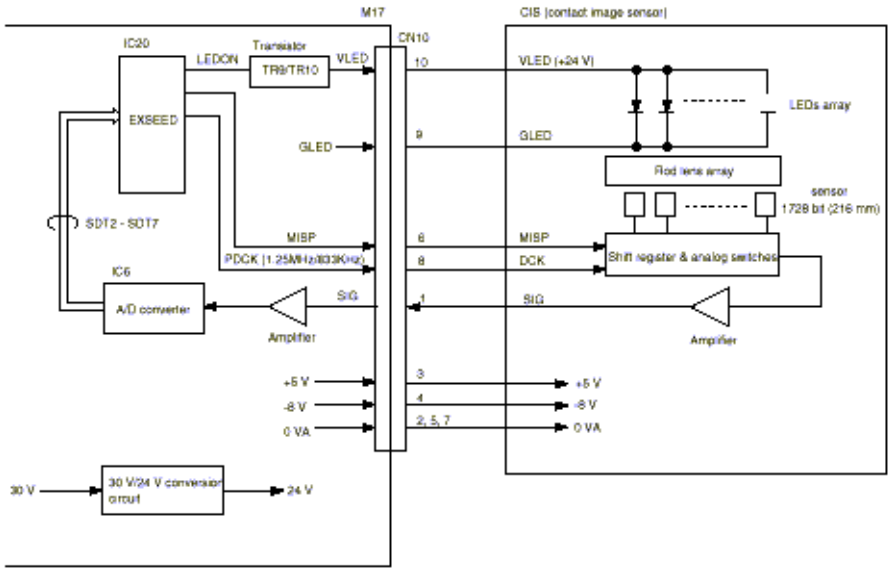

Copyright 1997, Okidata, Division of OKI America, Inc. All rights reserved. See the OKIDATA Business Partner Exchange (BPX) for any updates to this material. (http://bpx.okidata.com)

1. Block diagram

The circuit diagram consists of the IEXSEED (image processing LSI) of IC20 and SRAM.

Figure A3.2.6 shows the related signals of IEXSEED.

2. Functions

IEXSEED is newly developed LSI for the image processing of OKIFAX 5300/5600.

IEXSEED contains the following functions:

- Contact image sensor driver
- Send motor forward rotation/chopping control
- Line buffer control

3. SRAM

256 KByte SRAM x 1 (RAM1)

Stores the dark/light level correction data.

Error diffusion data and image separation data are processed by IEXSEED.

Copyright 1997, Okidata, Division of OKI America, Inc. All rights reserved. See the OKIDATA Business Partner Exchange (BPX) for any updates to this material. (http://bpx.okidata.com)

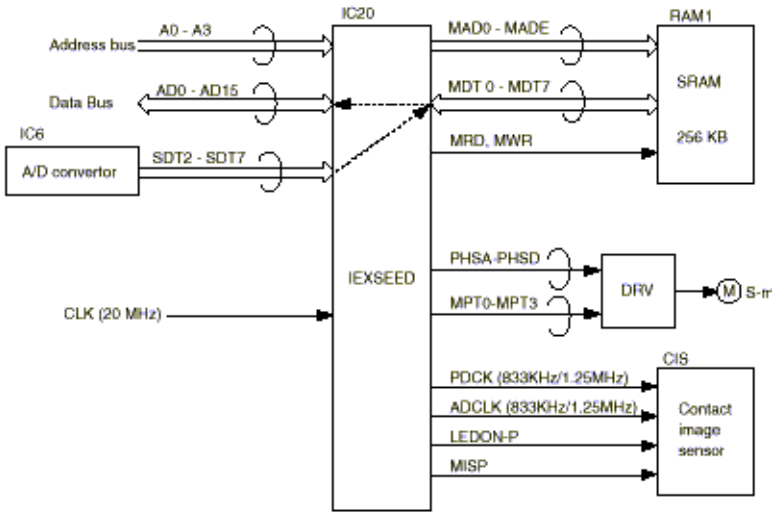

Copyright 1997, Okidata, Division of OKI America, Inc. All rights reserved. See the OKIDATA Business Partner Exchange (BPX) for any updates to this material. (http://bpx.okidata.com)

1. Block diagram

The circuit diagram consists of connector CN15 that provides an interface between M17 board and the Modem board (28.8 kbps).

The circuit diagram consists of Modem (14.4kbps).

The circuit diagram consists of Modem (V34 modem or S34).

Modem consists the following functions:

- Modulation/demodulation

Modulation type:

1) ITU-T Rec. V34 (28800 bps) for G3 picture data: OKIFAX 5600
2) ITU-T Rec. V17 (14400/12000/9600/7200 bps) for G3 picture data.
3) ITU-T Rec. V33 (14400/12000 bps) for G3 picture data.
4) ITU-T Rec. V29 (9600/7200 bps) for G3 picture data.
5) ITU-T Rec. V27 ter (4800/2400 bps) for G3 picture data.
6) ITU-T Rec. V21 channel 2 (300bps) for binary signals defined in ITU-T Rec. T.30.

- Automatic adaptive equalizer for G3 receive data with 300 bps data excluded.
- Generation of signal tones
- PB tone (multi-frequency tone) generation
- Detection of single tones
- D/A converter for send data (TX)
- A/D converter for receive data (RX)
- Amplitude equalizer for RX
- Selectable attenuation for TX
- Automatic gain control

Figure A3.2.8 shows the related signals of Modem.

Copyright 1997, Okidata, Division of OKI America, Inc. All rights reserved. See the OKIDATA Business Partner Exchange (BPX) for any updates to this material. (http://bpx.okidata.com)

Related Signals of Modem (Figure A3.2.8)

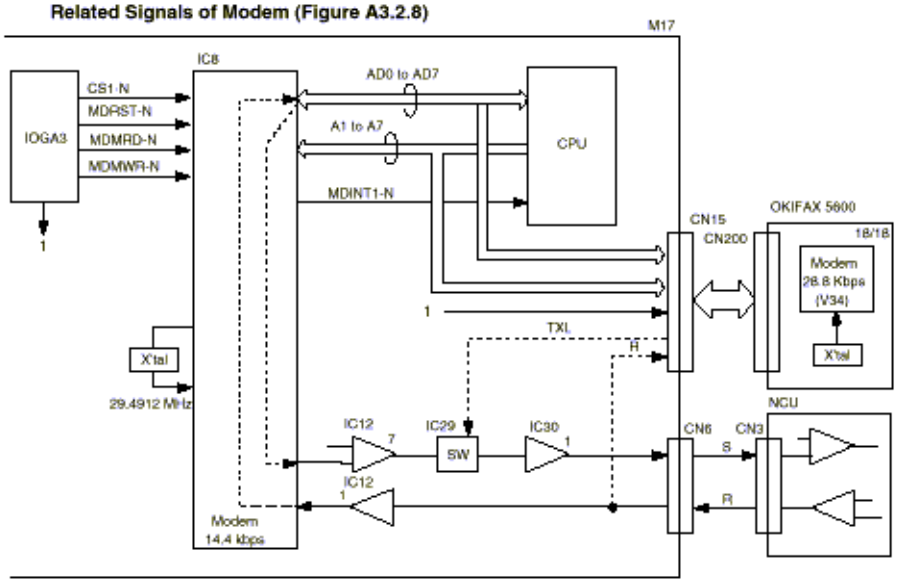

Copyright 1997, Okidata, Division of OKI America, Inc. All rights reserved. See the OKIDATA Business Partner Exchange (BPX) for any updates to this material. (http://bpx.okidata.com)

1. Block diagram

The circuit diagram shown consists of the following connectors:

- Connector CN6 that provides an interface between M17 board and NCU board.
- Connector CN7 that provides an interface between M17 board and external electro-mechanical devices (PC1 and PC2).
- Connector CN9 that provides an interface between M17 board and OPE (O5W) unit.

Figure A3.2.9 shows an interface between M17 board and NCU board.

Figure A3.2.10 shows an interface between M17 board and OPE unit.

Figure A3.2.11 shows the related signals of PC1 and PC2.

2. Function

1) External status supervising interface (PC1/PC2)

External status is detected by the photocouplers (PC1/PC2) in the mechanism and the signal is output to the input port of CPU via this interface circuit.

- PC1: Presence of document on hopper.

When sub-power supply is applied to the fax machine, this signal is output to OPE unit which will control the main-power supply.

- PC2: Presense of document at scanning position.

3. Others

NCU interface signal

- CML : Line seizure control signal
- DP : Dial pulse control signal
- SR : Control signal for connection between LINE and TEL terminals
- MUTE : Control signal for pulse dial improvement and bell shunt replay
- PP : Relay control signal for special service code detection at parallel pickup or remote reception
- PBXE : Control signal for connecting one of LINE terminal to the PBXE terminal

- OH2 : Detection of off-hook of terminal connected to TEL-1 or TEL-2
- OH1 : Output upon circuit current detection after fax line seizure
- RP : Receiving sensitivity determination terminal
- RI : Ringing detection signal
- S : Send signal (picture data/protocol/tonal signals/PB tone etc.)
- R : Received signal (picture data/protocol/tonal signals etc.)

OPE interface signals

- TXDOPE : This signal transmits sequentially the contents of each data of TXD (LED on/off information, etc.) to OPE in serial data from CPU.
- RXDOPE : This signal transmits sequentially the contents of each data of RXD (key code information, etc.) to CPU in serial data from OPE.
- OPECHK : Use to monitor the operation of the OPE unit.
- OPERST : Reset signal for OPE unit
- WAKEUP-N : Wakeup signal
- PSMODE : Power Save Mode off signal from OPE.
- MP/OFF : Main Power On/Off signal to Main Power Supply Unit.
- MPREQ : Main Power off signal from CPU.

Copyright 1997, Okidata, Division of OKI America, Inc. All rights reserved. See the OKIDATA Business Partner Exchange (BPX) for any updates to this material. (http://bpx.okidata.com)

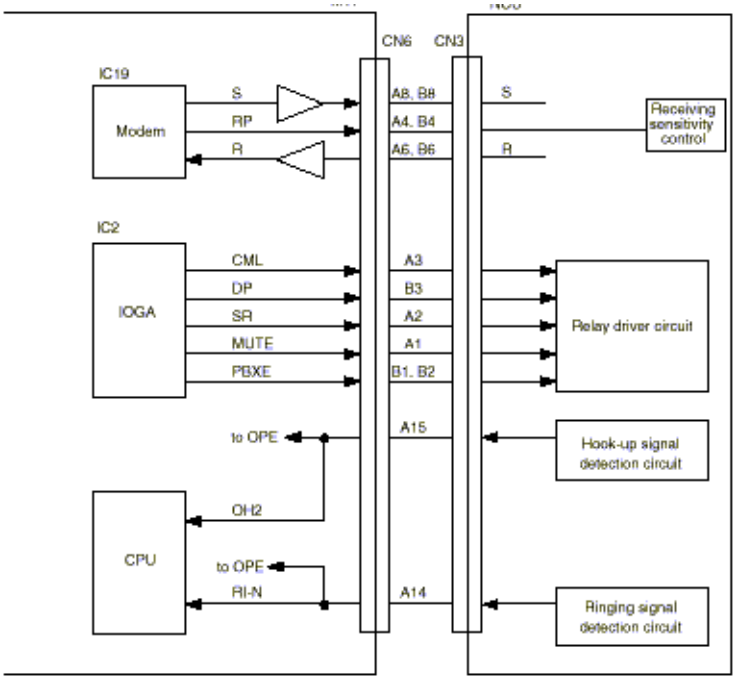

Copyright 1997, Okidata, Division of OKI America, Inc. All rights reserved. See the OKIDATA Business Partner Exchange (BPX) for any updates to this material. (http://bpx.okidata.com)

OKIDATA®

Service Manual for OF5300/5600

Chapter A Board Descriptions

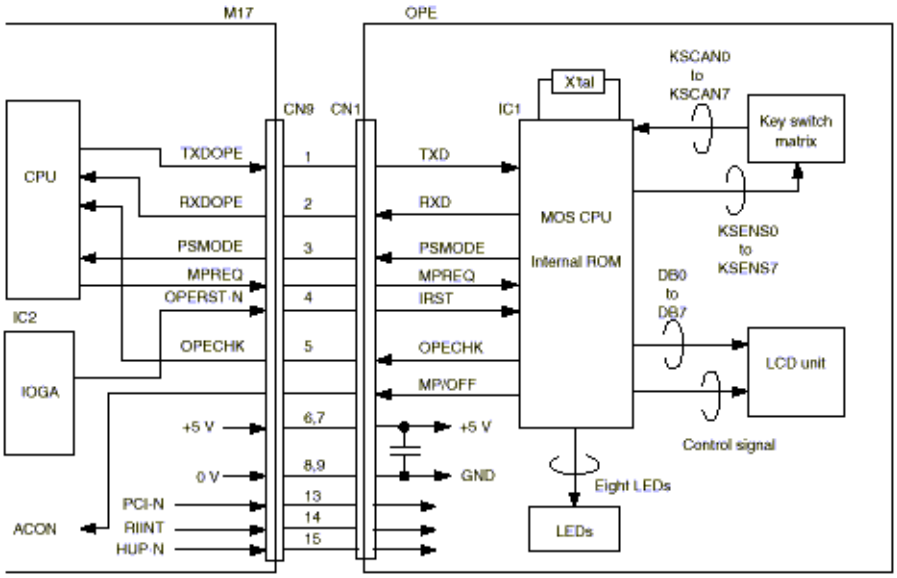

Copyright 1997, Okidata, Division of OKI America, Inc. All rights reserved. See the OKIDATA Business Partner Exchange (BPX) for any updates to this material. (http://bpx.okidata.com)

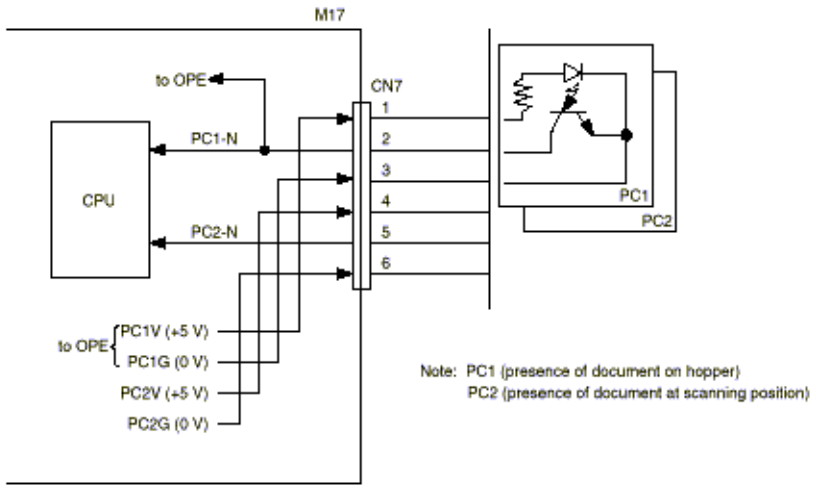

Copyright 1997, Okidata, Division of OKI America, Inc. All rights reserved. See the OKIDATA Business Partner Exchange (BPX) for any updates to this material. (http://bpx.okidata.com)

1. Block diagram

The circuit diagram consists of connector CN2 that provides an interface between M17 board and LED print head.

Figure A3.2.12 shows the related signals and block diagram of LED print head.

2. Function

Data of 1664 LEDs on the LED print head is loaded into the shift registers by the HCLCK (6.67 MHz) signal. After the 1664 bit (208mm) data is loaded in the shift registers, it is then loaded in the latch circuit by the HLATCH signal. The turning -on and off of the LEDs are controlled by STRB1-N to STRB4-N signals.

LED head interface signals output from IOGA

- HDATA 0: Print data i.e., data to be printed
- HCLCK: Transfer clock for print data (6.67 MHz/10MHz)
- HLATCH: Latch signal for print data
- STRB1-N to STRB4-N : LED head strobe signals

Copyright 1997, Okidata, Division of OKI America, Inc. All rights reserved. See the OKIDATA Business Partner Exchange (BPX) for any updates to this material. (http://bpx.okidata.com)

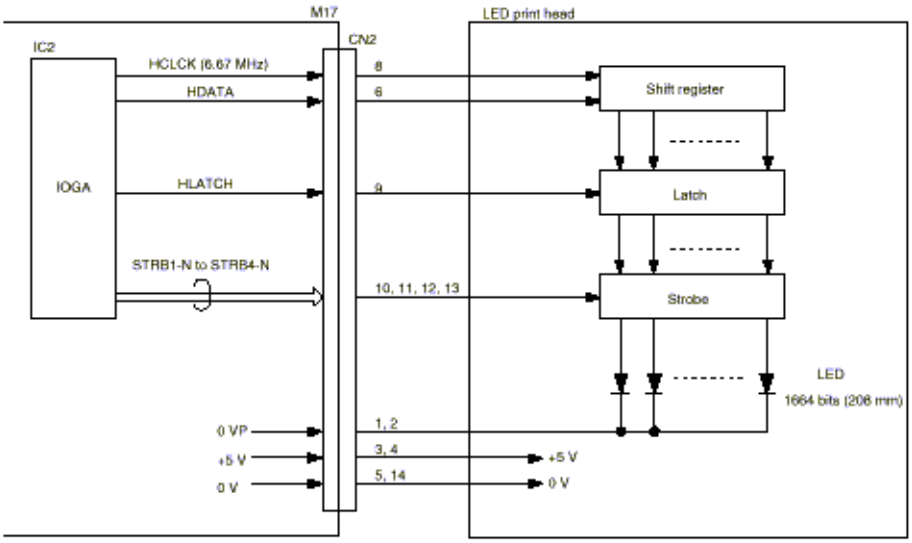

Copyright 1997, Okidata, Division of OKI America, Inc. All rights reserved. See the OKIDATA Business Partner Exchange (BPX) for any updates to this material. (http://bpx.okidata.com)

1. Block diagram

The circuit diagram consists of the following functions and connectors:

- IC21 (Send motor drive)
- Connector CN5 that provides an interface between M17 board and the send motor.

Figure A3.2.13 shows the related signals of the send motor.

2. Function

1) Send motor rotaion and chopper control

Send motor drive signals are generated by the IEXSEED and output to send motor via IC21 (motor drive IC) of this circuit.

Note: The built-in motor control circuit of IEXSEED consists of the following blocks:

- Setting of the excitation operation
- Setting of the chopping operation
- Setting of the chopping frequency
- Setting of the motor forward
- Setting of the motor excitation method (1-2/2-1 phase excitation)

a) Send motor rotaion control

There are several cases of the rotation operation:

Forward rotation for feeding documents.

- Case 1: Feeding document from hopper to the position where one line data is read.
- Case 2: Feeding document while reading.
- Case 3: Feeding document after a page has been read.

b) Send motor chopper control

The purpose of chopper control is to reduce the current to the motor by setting the phase signal on and off intermittently when a time lapse exceeding a specific time occurs without a phase update.

Copyright 1997, Okidata, Division of OKI America, Inc. All rights reserved. See the OKIDATA Business Partner Exchange (BPX) for any updates to this material. (http://bpx.okidata.com)

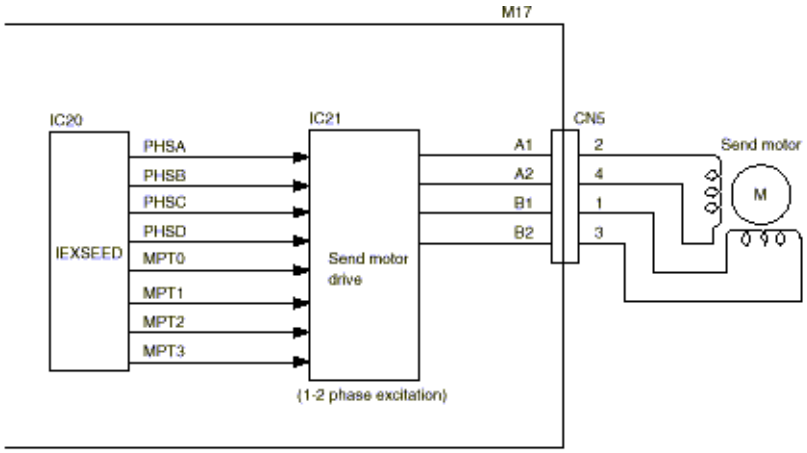

Copyright 1997, Okidata, Division of OKI America, Inc. All rights reserved. See the OKIDATA Business Partner Exchange (BPX) for any updates to this material. (http://bpx.okidata.com)

1. Block diagram

The circuit diagram consists of the following functions and connectors:

- IC9 (Drum motor driver)
- IC22 (Resist motor driver)
- Connector CN3 that provides an interface between M17 board and the resist motor.
- Connector CN4 that provides an interface between M17 board and the drum motor.

Figure A3.2.14 shows the related signals of the drum motor and resist motor.

2. Function

1) Drum motor control

The drum motor is driven by the motor driver IC9. It is two-phase excited and bipolar-driven according to the DMPH1 and DMPH2 signals that are generated from the CPU. The DMON2-N, DMENA-N signal are generated from CPU. This
drum motor rotates the image drum.

2) Resist motor control

The resist motor is driven by the motor driver IC22. It is two-phase excited and bipolar-driven according to the RMPH1 and RMPH2 signals that are generated from the CPU. The RMON1-N, RMON2-N signal ARE generated from CPU. This resist motor rotates the hopping (paper hopping) and the resist (paper feed) rollers.

Refer to Appendix B for more information.

Copyright 1997, Okidata, Division of OKI America, Inc. All rights reserved. See the OKIDATA Business Partner Exchange (BPX) for any updates to this material. (http://bpx.okidata.com)

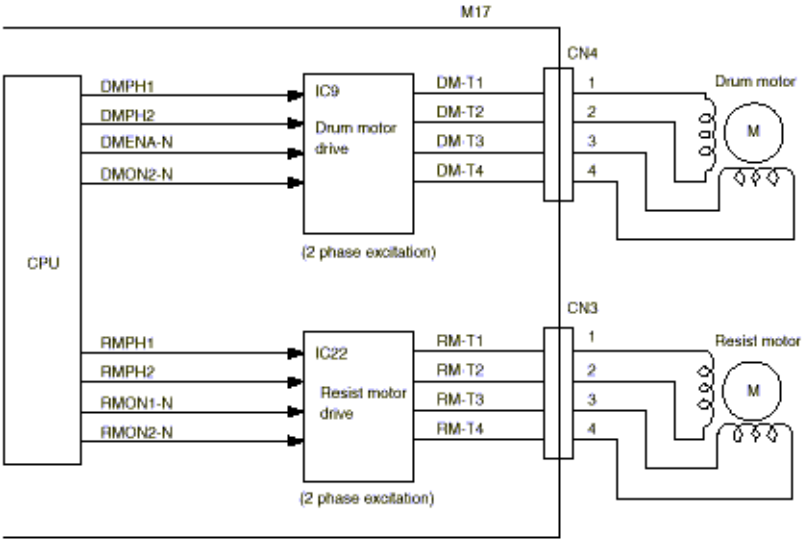

Copyright 1997, Okidata, Division of OKI America, Inc. All rights reserved. See the OKIDATA Business Partner Exchange (BPX) for any updates to this material. (http://bpx.okidata.com)

1. Block diagram

The circuit diagram consists of the following connectors:

- Connector CN11 that provides an interface between M17 board and the fan motor.
- Connector CN14 that provides an interface between M17 board and the second tray (option).
- Connector CN16 that provides an interface between M17 board and Sub-power unit.

Figure A3.2.15 shows the related signals of the fan motor.

Figure A3.2.16 shows an interface between M17 board and the second tray (option).

2. Function

1) Fan motor control

The fan motor is controlled by the FANON signal generated from IOGA3 under the temperature control of the heater.
The operating status of the fan is supervised by the FANSNS-N signal.

The fan rotates in the following 3 status:

- Normal mode
- Cover open
- Paper jamming occurring in the paper transport route

2) Second tray (option)

Second tray consists of the following functions:

- Paper capacity : 500 sheets
- Paper size : A4, Letter, Legal
- Paper-size selection : Manual
- Cassette/no-cassette selection : Automatic
- Paper/no-paper selection : Automatic
- Paper route open to facsimile transceiver unit: Automatic decision

Control method:

When second tray is installed on the facsimile transceiver unit, the tray is connected to the facsimile transceiver unit by a connector. The tray controls by the command from CPU of PU (printer unit) section.

Copyright 1997, Okidata, Division of OKI America, Inc. All rights reserved. See the OKIDATA Business Partner Exchange (BPX) for any updates to this material. (http://bpx.okidata.com)

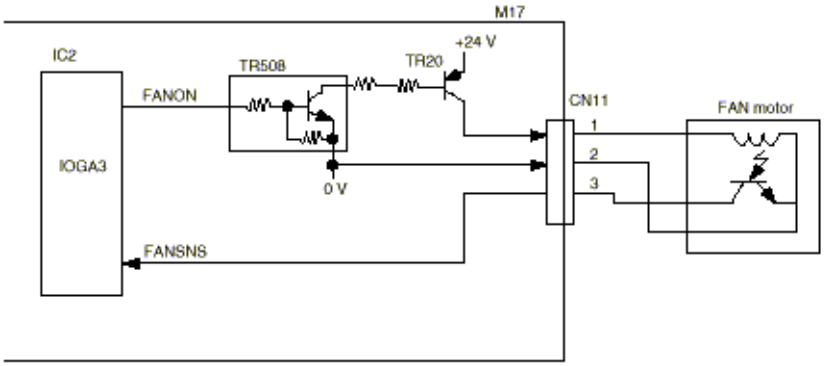

Copyright 1997, Okidata, Division of OKI America, Inc. All rights reserved. See the OKIDATA Business Partner Exchange (BPX) for any updates to this material. (http://bpx.okidata.com)

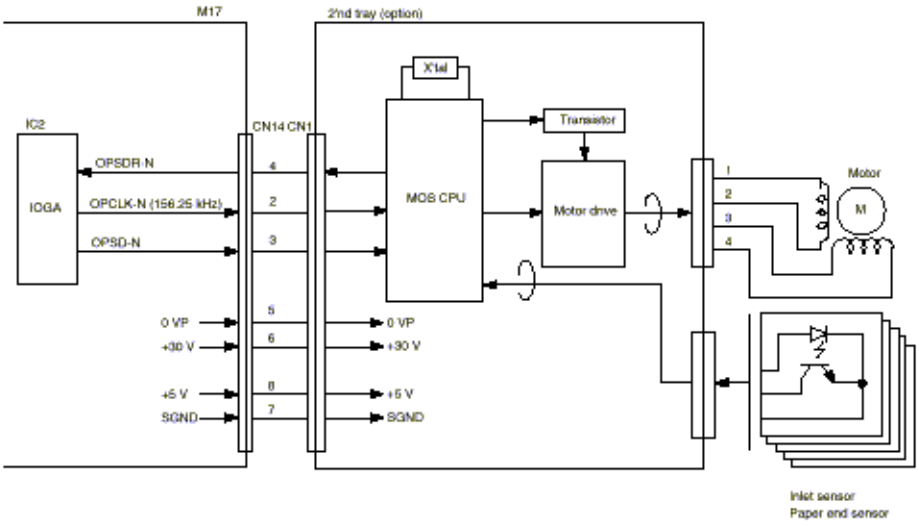

Copyright 1997, Okidata, Division of OKI America, Inc. All rights reserved. See the OKIDATA Business Partner Exchange (BPX) for any updates to this material. (http://bpx.okidata.com)

1. Block diagram

The circuit diagram consists of the following connector:

- Connector CN1 provides an interface between M17 board and main power supply unit.

2. Function

1) Sensors and switch control

Six types of sensors are used in the printer as listed below. All of their output enter IOGA3 ports for referring to and processing by the CPU.

Figure A3.2.17 shows sensors and switch control.

- Inlet sensor 1 and 2
- Write sensor (To detect the paper top position for printing)
- Outlet sensor
- Paper end sensor
- Toner end sensor
- Cover status switch

The functions of various sensors are described in the table in the next section.

Copyright 1997, Okidata, Division of OKI America, Inc. All rights reserved. See the OKIDATA Business Partner Exchange (BPX) for any updates to this material. (http://bpx.okidata.com)

Sensor Type	Sensor Name	Function
PSIN-N PSIN2-N	Inlet sensor Inlet sensor 2	This photosensor is positioned before the resist roller to detect whether the paper has entered into the printer section.
WRSNS-N	Write sensor	Detects the arrival of paper at designated position on the paper transport route inside the printer in order to turn on the light of the LED head. 0: Paper exists, 1: paper does not exist
PSOUT-N	Outlet sensor	Located at the exit of the printer to supervise the paper exit operation 0: Paper exists, 1: paper does not exist
PAPER-N	Paper sensor	Detects the presence of paper in the paper cassette. 0: Paper exists, 1: paper does not exist
TNRSNS-N	Toner sensor	Detects the remaining toner in the toner cartridge. "The length of time of low-toner state within fixed time interval" detects a low-toner state.
CVOPN-N	Cover open sensor	Detects whether the cover of the printer section is open or not. 0: Paper exists, 1: paper does not exist

Copyright 1997, Okidata, Division of OKI America, Inc. All rights reserved. See the OKIDATA Business Partner Exchange (BPX) for any updates to this material. (http://bpx.okidata.com)

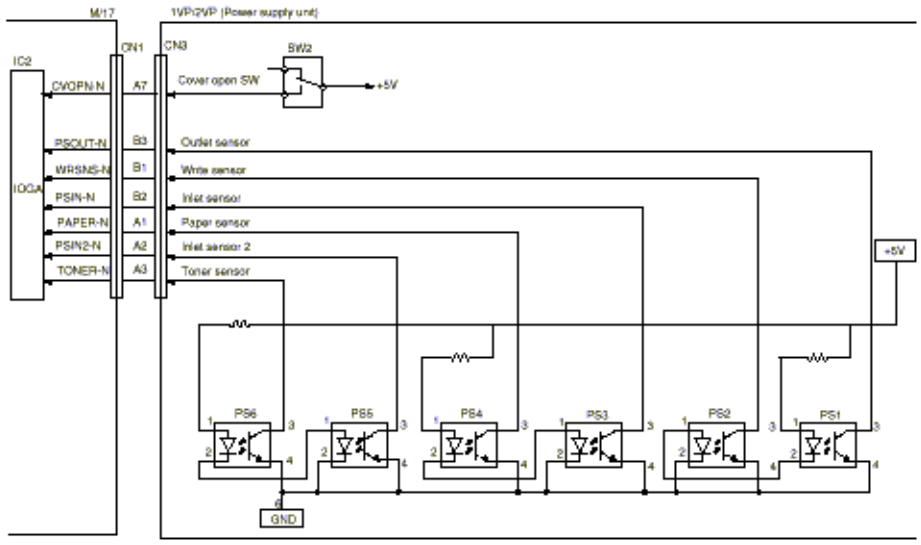

Copyright 1997, Okidata, Division of OKI America, Inc. All rights reserved. See the OKIDATA Business Partner Exchange (BPX) for any updates to this material. (http://bpx.okidata.com)

2) Fuser unit temperature control

The heater in the fuser unit is controlled by the thermister, IOGA3 and CPU to keep the heater roller surface within a prescribed temperature range. The CPU supervises the status of the port PC0 periodically, turning HEATON signal on and off according to CPU of PC0 (A/D converter input section) status to exercise temperature control.

At power on time, the CPU switches the output signal THON from pin 65 (between high and low states) to check for a blown or shorted thermister according to the status of the THCHK signal.

A built-in thermostat in the fuser unit prevents the heater from being overheated in event of failures in the thermister, or temperature control circuit, etc.

Figure A3.2.18 below shows the fuser unit temperature control.

Note: Heater control

Temperature of the heater at the time of printing is 150 °C to 180 °C. This temperature is maintained by controlling the on and off operation of heater according to the input of the thermister converted into analogue-digital (A/D) values by the CPU.

Fuser Unit Temperature Control (Figure A3.2.18)

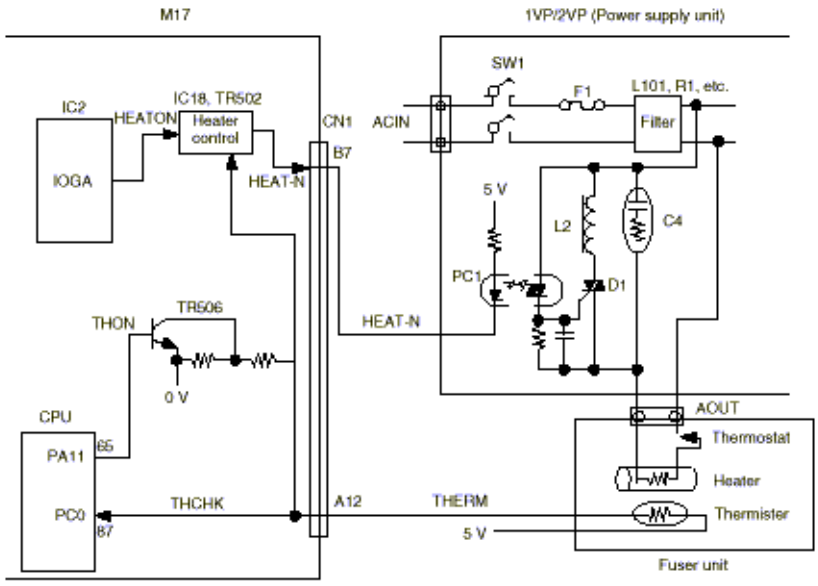

Copyright 1997, Okidata, Division of OKI America, Inc. All rights reserved. See the OKIDATA Business Partner Exchange (BPX) for any updates to this material. (http://bpx.okidata.com)

3) High-voltage and medium-voltage control

High voltages are activated by IOGA3 and generated by the high-voltage circuit inside the power supply unit. The CH (charge) voltage of about -1.35 kV is used for the charge roller. The TR1/TR2 (transfer) voltage of about +3.5 kV/-0.75 kV is used for the transfer roller.

Medium voltages are activated by IOGA3 and generated by the medium-voltage circuit inside the power supply unit. The SB1/SB2 (toner supply) voltage of about +0 V/-450 V is used for the toner supply roller. The DB1/DB2 (developing) voltage of about +300 V/-300 V is used for the developing roller. The CB (cleaning) voltage of about +400V is used for the cleaning roller.

Figure A3.2.19 below shows high/medium voltages control.

* Signals used to control the high/medium-voltages are listed below.

SIGNAL NAME	DESCRIPTION
CHPWM	P.W.M.: CH is output.
DB1ENB	"1"; + ive polarity voltage of DB1/SB1 is output.
DB2ENB	"1"; - ive polarity voltage of DB2/SB2/CB is output.
TR1PWM	P.W.M.: TR1 is output.
TR2PWM	P.W.M.: TR2 is output.
DBPWM	P.W.M.: DB/SB/CB is output.

High/Medium Voltage Control (Figure A3.2.19)

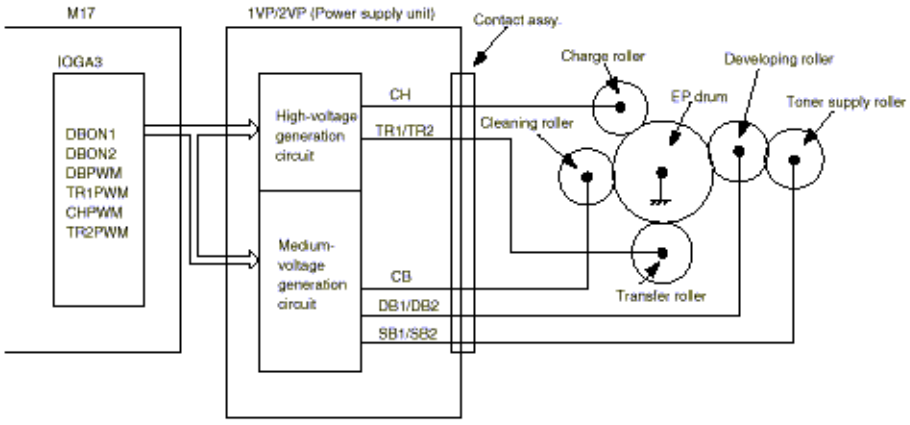

Copyright 1997, Okidata, Division of OKI America, Inc. All rights reserved. See the OKIDATA Business Partner Exchange (BPX) for any updates to this material. (http://bpx.okidata.com)

1. Block diagram

The circuit diagram consists of the following connector:

- Connector CN13 that provides an interface between M17 board and optional memory board.
- Connector CN12 and CN17 that provides an interface between M17 board and CTR (PC interface) board.

Figure A3.2.20 shows the interface between M17 and memory board.

Figure A3.2.21 shows the interface between M17 and PC interface board.

Note 1: One of 1 Mbyte or 2 Mbyte memory board can be added to the memory capacity for OKIFAX 5600.

1M byte for OKIFAX 5300.

Copyright 1997, Okidata, Division of OKI America, Inc. All rights reserved. See the OKIDATA Business Partner Exchange (BPX) for any updates to this material. (http://bpx.okidata.com)

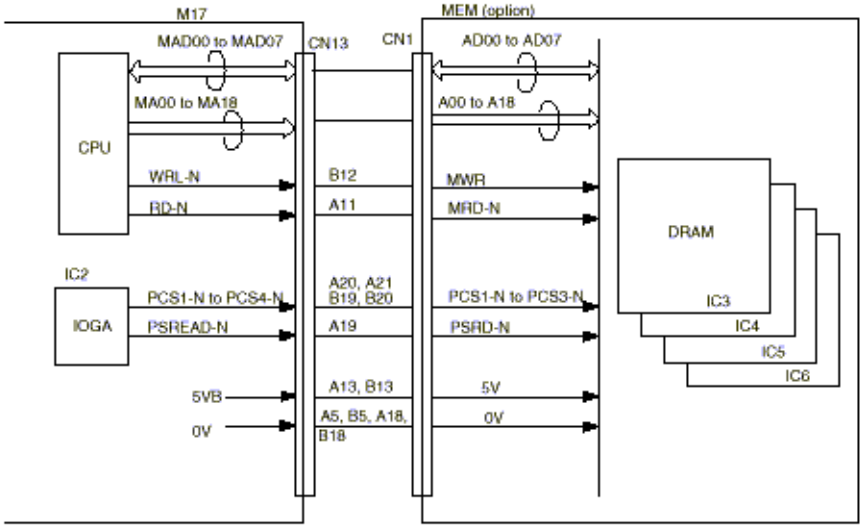

Copyright 1997, Okidata, Division of OKI America, Inc. All rights reserved. See the OKIDATA Business Partner Exchange (BPX) for any updates to this material. (http://bpx.okidata.com)

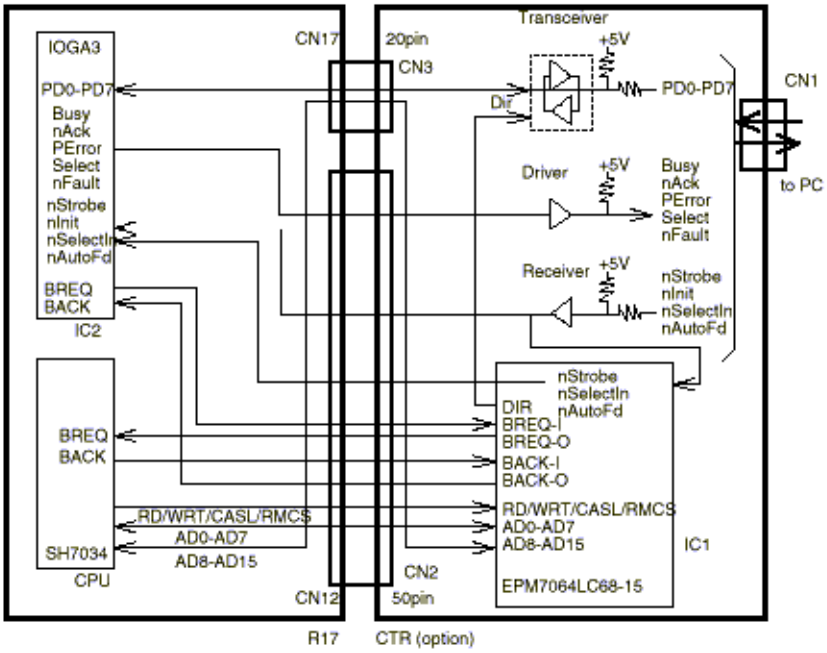

Copyright 1997, Okidata, Division of OKI America, Inc. All rights reserved. See the OKIDATA Business Partner Exchange (BPX) for any updates to this material. (http://bpx.okidata.com)

1. Block diagram

The circuit diagram consists of the following functions and connectors:

- RAM3 to RAM5

Figure A3.2.22 shows the block diagram of DRAM.

2. Function

1) PSRAM

2 MByte DRAM x 1 (RAM3) for ODA version

512 KByte DRAM x 2 (RAM4 and RAM5) for INT'L version

- Used as follows:

Picture memory for the ECM send/receive modes.
Picture memory for the memory transmission mode.
Picture memory for the retransmission mode.
Picture memory for the reception in memory.
Editing for report printing.

Copyright 1997, Okidata, Division of OKI America, Inc. All rights reserved. See the OKIDATA Business Partner Exchange (BPX) for any updates to this material. (http://bpx.okidata.com)

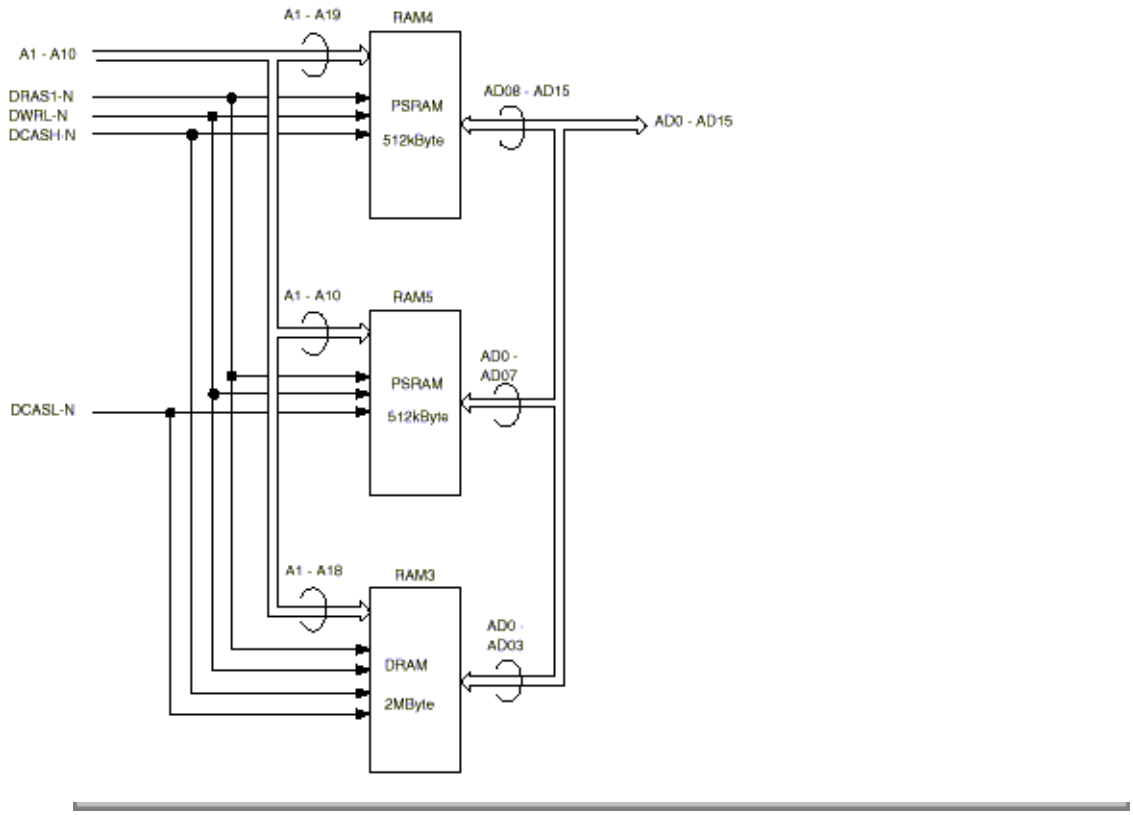

Copyright 1997, Okidata, Division of OKI America, Inc. All rights reserved. See the OKIDATA Business Partner Exchange (BPX) for any updates to this material. (http://bpx.okidata.com)

1. Block diagram

Figure A3.4.1 shows a block diagram of OPE (05W).

The O5WH (operation unit) circuit consists of the following blocks:

1) IC1 (one chip MOS-CPU)

- Output ports

Setting LEDs on and off: 8 ports

Specifies the row during key switch matrix scanning: 8 ports

- Input ports

Detect the column whose key is pressed: 8 ports

2) Key switch matrix (8 rows x 8 columns)

3) LEDs (8 LEDs)

4) LCD unit

2. Key switch scanning

Output ports (KSCAN0 to KSCAN7 signal) corresponding to 8 rows of key matrix are scanned sequentially by the software. In the case 1 is any of output from KSCAN0 to KSCAN7 signal which corresponds to the row 8 in the block diagram, the software reads input port, KSENS0 to KSENS7, and determines which in the row 8 is pressed.

3. LED drives and LEDs

Eight LEDs (ALARM, PHOTO, LIGHT, etc.) on the control panel are driven by output of IC1 via resistors R1, R4-9 and R11 respectively. An LED lights when a port output is 1.

4. In case sub-power supply is applied to the fax machine: when PC1-N, HUP-N or RIINT signal is input to OPE unit, OPE unit controls the main power supply (120/230 board) by outputting the MP/OFF (ACON) signal.

- PC1-N: Presence of document on hopper
- HUP-N: OFF-Hook detection for TEL 1 and TEL 2 terminal
- RIINT: Ringing detection signal

Copyright 1997, Okidata, Division of OKI America, Inc. All rights reserved. See the OKIDATA Business Partner Exchange (BPX) for any updates to this material. (http://bpx.okidata.com)

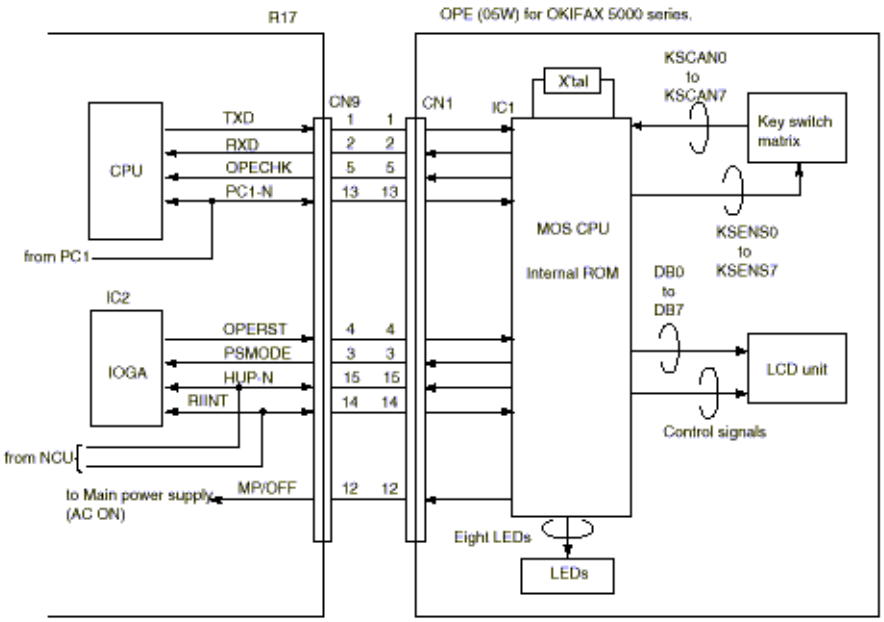

Copyright 1997, Okidata, Division of OKI America, Inc. All rights reserved. See the OKIDATA Business Partner Exchange (BPX) for any updates to this material. (http://bpx.okidata.com)

A3.6.1 1VP (for 120 V)/2VP (for 230 V) Circuit Diagram (1/2)

A3.6.2 1VP (for 120 V)/2VP (for 230 V) Circuit Diagram (2/2)

Copyright 1997, Okidata, Division of OKI America, Inc. All rights reserved. See the OKIDATA Business Partner Exchange (BPX) for any updates to this material. (http://bpx.okidata.com)

IMPORTANT: Oki Data Corporation recommends that maintenance of the Power supply unit (1VP/2VP board) be performed by replacement of the whole power supply unit, not by replacement of components.

Therefore,

1) circuit descriptions in this section are for reference.

2) orders for components of the power supply unit cannot always be accepted.

Functions of unit:

1VP/2VP circuit generates the following direct currents (DC) based on the alternating current,

AC 120 V +6%, -15%

AC 230 V +15%, -14%

1. Low-voltage power supply circuit

This circuit generates the following voltages.

Copyright 1997, Okidata, Division of OKI America, Inc. All rights reserved. See the OKIDATA Business Partner Exchange (BPX) for any updates to this material. (http://bpx.okidata.com)

This circuit generates the following voltages.

Output Voltage	Output Voltage
+5 V	Logic circuit supply voltage (IC LSI), and high-voltage source voltage, etc.
+8 V	CIS (contact image sensor)
-8 V	CIS (contact image sensor)
+30 V	Send motor, drum motor, resist motor, fan drive, flash memory, CIS, and 2nd tray voltage

Copyright 1997, Okidata, Division of OKI America, Inc. All rights reserved. See the OKIDATA Business Partner Exchange (BPX) for any updates to this material. (http://bpx.okidata.com)

- Voltage: AC 120 V +6%, -15% (AC 102 V to 127 V
  AC 230 V +15%,-14% (AC 198 V to 264 V)
- Frequency: 50/Hz/60Hz +/-2%

Copyright 1997, Okidata, Division of OKI America, Inc. All rights reserved. See the OKIDATA Business Partner Exchange (BPX) for any updates to this material. (http://bpx.okidata.com)

Transformer type B

Pin No.	Rated Voltage	Rated Current	Current Range	Voltage Range	Output Ripple	Output Noise
CN3-B11-B13 A13	+5V	1.8 A	0.2 to 4.5 A	5 V +/-4%	100 mVP-P	250 mVP-P
CN3-A15, B15	+30 V	1.20 A	0 to 1.20 A	-	4.0 VP-P	-
CN3-A14	+8 V	0.1 A	0 to 0.1 A	6.5 to 15 V	3.0 VP-P	3.6 VP-P
CN3-B14	-8 V	0.1 A	0 to 0.1 A	-15 to 6.5 V	3.0 VP-P	3.6 VP-P

Copyright 1997, Okidata, Division of OKI America, Inc. All rights reserved. See the OKIDATA Business Partner Exchange (BPX) for any updates to this material. (http://bpx.okidata.com)

Symbol	1VP Board	2VP Board	Remarks
INLET Ass'y	4YS4011-2894P001	4YS4011-2894P002	
F1	51MS063L	19181-5A	
F2	51MS016L	Not mounted	
F3	GGS 3.15	21702.5	
T1 (Transformer 10	4YB4049-7082P1	4YB4049-7083P1	
C1, C2, C56 and C242	Not mounted	Mounted	
R18, R51, R52 and R125	Not mounted	Mounted	

* This information contained herein can change without notice owing to product and/or technical improvements.

Copyright 1997, Okidata, Division of OKI America, Inc. All rights reserved. See the OKIDATA Business Partner Exchange (BPX) for any updates to this material. (http://bpx.okidata.com)

Figure A3.6.1 shows a block diagram of 1VP (120V)/2VP (230V).

Note: The differences between 1VP (AC120V) and 2VP (AC230V) board are shown in the following table.

Symbol	1VP board	2VP board	Remarks
INLET Ass'y	4YS4011-2894P001	4YS4011-2894P002	
F1	51MS063L	19181-5A	
F2	51MS016L	Not mounted	
F3	GGS 3.15	21702.5	
T1 (Transformer 1)	4YB4049-7082P1	4YB4049-7083P1	
C1, C2 C56 and C242	Not mounted	Mounted	
R18, R51, R52 and R125	Not mounted	Mounted	

* The information contained herein can change without notice owing to product and/or technical improvements.

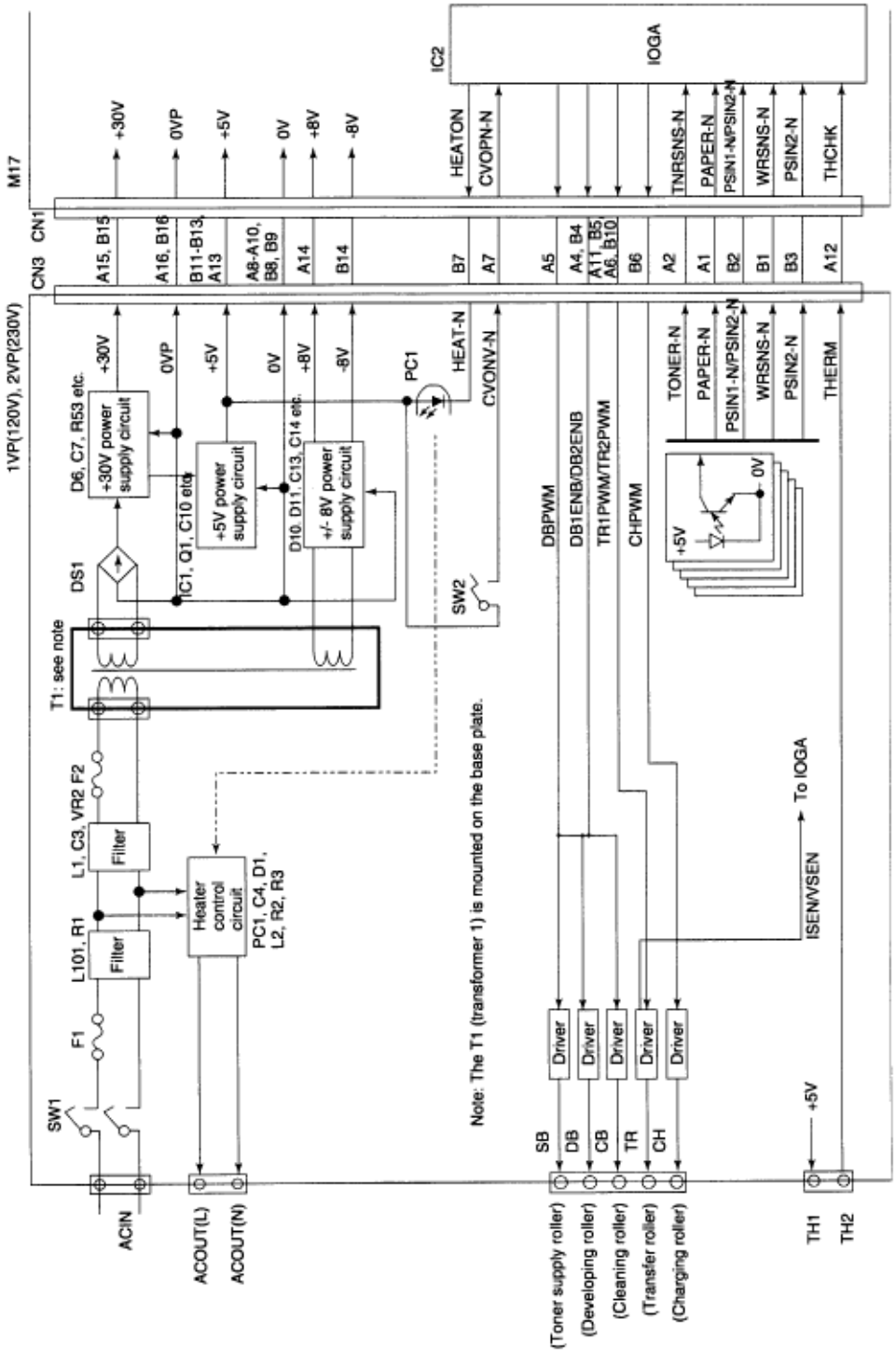

Copyright 1997, Okidata, Division of OKI America, Inc. All rights reserved. See the OKIDATA Business Partner Exchange (BPX) for any updates to this material. (http://bpx.okidata.com)

Service Manual for OF5300/5600

Chapter A Board Descriptions

5-1 General

5-2 Circuit description

5-3 Low-voltage section

5-4 Protection circuits

5-5 Cover open circuit

Copyright 1997, Okidata, Division of OKI America, Inc. All rights reserved. See the OKIDATA Business Partner Exchange (BPX) for any updates to this material. (http://bpx.okidata.com)

The power supply unit consists mainly of AC transformer and a power PCB (1VP board for AC120V/2VP board for AC230V). A block diagram of the power supply unit is shown in Figure A3.6.1 The power PCB is composed of five main circuits: AC input section, heater control section, low-voltage section, high-voltage section and protection circuit.

The low-voltage section provides a +5V output by a DC-DC converter and other output voltages (+30V, +8V and -8V) simply by rectifying and smoothing the respective outputs of the AC transformer. The high-voltage section (TR1, TR2, DB1, DB2, SB1, SB2, CB and CH) produces a flyback voltage from 5V by using a drum coil and a high-voltage
transformer.

Copyright 1997, Okidata, Division of OKI America, Inc. All rights reserved. See the OKIDATA Business Partner Exchange (BPX) for any updates to this material. (http://bpx.okidata.com)

5-2-1 AC input section

5-2-2 Heater control circuit

Copyright 1997, Okidata, Division of OKI America, Inc. All rights reserved. See the OKIDATA Business Partner Exchange (BPX) for any updates to this material. (http://bpx.okidata.com)

1) AC commercial power is supplied to line filter circuit through the AC inlet, power switch (SW1) and the fuse (F1). Fuse F1 is used for protecting the heater circuit.

2) The filter circuit consists of L101, R1, C1, C2, C3 and L1. Capacitors C1 and C2 are not mounted in the power unit for 120VAC input.

3) Fuse F2 is used for protection for the double voltage input in the power supply unit for 120VAC input and will not blow by shorting or opening the secondary circuit. This fuse F2 is not mounted in the power supply unit for 230VAC input.

Copyright 1997, Okidata, Division of OKI America, Inc. All rights reserved. See the OKIDATA Business Partner Exchange (BPX) for any updates to this material. (http://bpx.okidata.com)

1) The AC power divided from the AC input section passes through L2 for noise elimination and is fed to the heater via D1 (operating as a switch) from the power PCB.

2) The on/off operation of D1 is controlled by the operation of photocoupler PC1 whose operation is controlled by the HEAT-N signal applied to CN3-B7 pin from the control PCB (M17 board).

3) Resistors R2 and R3 connected on the AC side of PC1 are fuse resistors to protect themselves from firing when PC1 turns on in the event of D1 open failure.

Copyright 1997, Okidata, Division of OKI America, Inc. All rights reserved. See the OKIDATA Business Partner Exchange (BPX) for any updates to this material. (http://bpx.okidata.com)

5-3-1 +30 V circuit

5-3-2 +/- 8 V circuit

5-3-3 +5 V circuit

Copyright 1997, Okidata, Division of OKI America, Inc. All rights reserved. See the OKIDATA Business Partner Exchange (BPX) for any updates to this material. (http://bpx.okidata.com)

1) The +30 V circuit provides +30 V output by rectifying the corresponding output of transformer T1 by a rectifier diode DS1 and smoothing the rectified signal by capacitor C7.

2) Resistor R53 is used to discharge the electric charge of C7 when the power switch (SW1) turned off.

Copyright 1997, Okidata, Division of OKI America, Inc. All rights reserved. See the OKIDATA Business Partner Exchange (BPX) for any updates to this material. (http://bpx.okidata.com)

1) The +/- 8 V circuit provides +8 V and -8 V outputs by rectifying the corresponding output of transformer T1 by rectifier diodes D10 and D11 and smoothing the rectified signals by capacitors C13 and C14.

2) Resistors R22 and R23 are used to discharge the electric charge of C13 and C14 when the power switch (SW1) is turned off.

Copyright 1997, Okidata, Division of OKI America, Inc. All rights reserved. See the OKIDATA Business Partner Exchange (BPX) for any updates to this material. (http://bpx.okidata.com)

1) +5 V circuit provides +5 V output by lowering +30 V output by means of DC-DC converter circuit.

2) IC1 is a control IC of frequency fixed type (operating at about 30 kHz in present power supply unit)

3) Q1 is a power transistor, D7 is a flywheel diode, and L3 , C10 and C20 compose a smoothing circuit.

4) The +5 V output is regulated as follows. The rectified +5 V is divided by resistors R83, R10 and R11 and the resulting voltage is applied to IC1, in which this voltage is regulated to a constant voltage. Thus, the regulated +5 V output is obtained by controlling IC1.

Copyright 1997, Okidata, Division of OKI America, Inc. All rights reserved. See the OKIDATA Business Partner Exchange (BPX) for any updates to this material. (http://bpx.okidata.com)

1) The protection circuit includes fuse F3 for +30 V and +5 V overcurrent protection circuit.

2) If an overvoltage is applied to the +5 V circuit, D8, R9 and D6 operate to short-circuit the +30 V circuit for half-wave cycle and fuse F3 will blow.

3) F1 will blow only in the event of AC line short-circuit.

Copyright 1997, Okidata, Division of OKI America, Inc. All rights reserved. See the OKIDATA Business Partner Exchange (BPX) for any updates to this material. (http://bpx.okidata.com)

1) The cover open circuit consists of SW2. When the stacker cover is opened, the cover open microswitch (SW2) on the 1VP/2VP board is turned off to cut the supply of H5V to the high-voltage power supply circuit. As a result all high-voltage outputs are interrupted. At the same time, the CVOPN-N signal is sent to the control board to notify it the off state of the microswitch, and the control board performs the cover open processing.

Copyright 1997, Okidata, Division of OKI America, Inc. All rights reserved. See the OKIDATA Business Partner Exchange (BPX) for any updates to this material. (http://bpx.okidata.com)

This circuit consists of photo-sensors and high voltage generation unit.

Note: If the high-voltage unit inside the 1VP/2VP circuit board is replaced, the output voltage and current output from the terminals must be checked and adjusted. This section does not describe the checking and adjustment methods,
however.

DANGER:

High voltage outputs are connected to the contact ass'y as shown in 5-6-1.

Copyright 1997, Okidata, Division of OKI America, Inc. All rights reserved. See the OKIDATA Business Partner Exchange (BPX) for any updates to this material. (http://bpx.okidata.com)

5-6-1 Functional overview

5-6-2 SB2, DB1, DB2 and CB

5-6-3 TR1 and TR2

5-6-4 CH

Copyright 1997, Okidata, Division of OKI America, Inc. All rights reserved. See the OKIDATA Business Partner Exchange (BPX) for any updates to this material. (http://bpx.okidata.com)

The high-voltage outputs consist of TR1 (3.5 kV), TR2 (-0.75 kV), DB1 (+300 V), DB2 (-300 V), SB2 (-450V), CB (+400 V) and CH (-1.35 kV) and are obtained as follows. The control signal obtained from IOGA of M17 board is applied to High-voltage power supply circuit. As result, the driver current is applied to the drive circuit, which will provide the high-voltage outputs.

Signal Name	Output Voltage	Application
SB1/SB2	0 +/- 5 V/-450 V	Voltage applied to toner supply roller.
DB1/DB2	+300 V/-300 V	Voltage applied to developing roller.
TR1/TR2	+3.5 kV/-0.75 kV	Voltage applied to transfer roller.
CH	-1.35 kV	Voltage applied to charging roller.
CB	+400 V	Voltage applied to cleaning roller.

Copyright 1997, Okidata, Division of OKI America, Inc. All rights reserved. See the OKIDATA Business Partner Exchange (BPX) for any updates to this material. (http://bpx.okidata.com)

1) These four high-voltage outputs are obtained from the flyback voltage of Q10.

2) The positive and negative voltages of DB1 and DB2 are obtained by switching the charging direction under the triac and thyristor.

3) Feedback is not applied to these outputs. However, SB2 is limited by D85 and DB2 is limited by D84 so as not to provide an output exceeding a preset voltage.

Copyright 1997, Okidata, Division of OKI America, Inc. All rights reserved. See the OKIDATA Business Partner Exchange (BPX) for any updates to this material. (http://bpx.okidata.com)

1) The TR1 high-voltage is obtained by rectifying the secondary output of Q17 switching circuit by a voltage-doubler rectifier.

2) TR1 output circuit has both constant current (hereinafter called CC) and constant voltage (hereinafter called CV) modes.

3) At first, TR1 output circuit operates in the CC mode. Once the voltage determined by parameters such as roller and medium is obtained, this circuit changes to operate in the CV mode by the control signal.

4) The TR2 output voltage is regulated by keeping the voltage obtained by switching operation of Q15 at a constant voltage by D66 and D65.

Copyright 1997, Okidata, Division of OKI America, Inc. All rights reserved. See the OKIDATA Business Partner Exchange (BPX) for any updates to this material. (http://bpx.okidata.com)

1) The CH output voltage is stabilized by keeping the primary flyback voltage obtained by switching operation of Q16 at a constant voltage by D76 and D82.

Copyright 1997, Okidata, Division of OKI America, Inc. All rights reserved. See the OKIDATA Business Partner Exchange (BPX) for any updates to this material. (http://bpx.okidata.com)

The photosensors mounted on this circuit board/sensor board supervise the paper running state during printing. These six photosensors are used in this printer as listed below. All of their outputs enter IOGA for referring to and processing by the CPU.

1) PS1 (photosensor 1): PSOUT
Supervises the paper feed according to the time of arrival at the sensor and the time of passage of paper.

2) PS2 (photosensor 2): WRSNS
Detects the leading part of sensor. Supervises the paper running state.

3) PS3 (photosensor 3): PSIN1
Detects the leading part of the paper and gives the supervision timing for switching from hopping operation to feeding operation. Supervises the paper running state and the paper size according to the paper arrival time and running time.

4) PS4 (photosensor 4): PAPER
Detects the end of the paper.

5) PS5 (photosensor 5): PSIN2
Not used

6) PS6 (photosensor 6): TONER
Detects the lack of the toner.

Copyright 1997, Okidata, Division of OKI America, Inc. All rights reserved. See the OKIDATA Business Partner Exchange (BPX) for any updates to this material. (http://bpx.okidata.com)

1. Block diagram

- Figure A3.7.1 shows a block diagram of UNC5 (NCU) circuit.

2. General functions of this circuit are as follows:

1) Generates and detects signals to be exchanged with a telephone exchange or network in Phases A and E defined by ITU T.30.

- Loop formation for call origination
- Line current detection (see note 1) before call origination
- Dial tone detection (see note 1)
- Generation of dial pulses (see note 2)
- Busy tone detection (see note 1)
- Ringing signal detection

2) Sends various data and signals from the R44/M17 board to the telephone line after amplification.

- Picture data/Protocol/Tonal signals/PB tone, etc.

3) Sends the following signals received from the line to the R44/M17 board as data after amplification.

- Picture data/Protocol/Tonal signals, etc.

Note 1: This procedure may be omitted depending on the dial parameters.

Note 2: MF (Multi-frequency) tone is generated by the modem and transferred to the telephone line via the NCU board.

4. Description on the NCU Block Diagram

4.1 UNC circuit diagram

1 Lightning arresters (AR1, 2)
The nominal operating voltage is 350 V.
When connecting the ground of the arrestor to the chassis, tighten ARG on the PCB with a screw. At this time, the PCB is grounded through the power cable. The TB1 arrestor ground terminal can also be used to connect to the earth directly.

4 DC circuits (R10, R11, C4)

These circuits provide DC characteristics according to the line requirements using the primary DC resistor in the line transformer T1 and the R10 and R11 resistors. The capacitor C4 bypasses AC signals.

5 Impedance matching network (R523, R536, C503)
This circuit matches the impedance between the line and equipment to reduce reflection of transmitted signals.

6 Receiving sensitivity (R574, R504)
The receiving sensitivity at line seizuring is determined by R574 and the MF tone receiving sensitivity at parallel pickup is determined by R504.

7 CML (RL1)
This circuit selectively switches the line between the telephone or facsimile.

8 SR (RL2)
This circuit connects the line with the telephone. During facsimile transmission, it disconnects the telephone.

11 PP (RL6)
If this circuits detects MF or CNG tones without seizuring a line, it sets a proper receiving sensitivity.

12 DP (RL3)
This circuit generates pulse dials.
If the circuit detects MF or CNG tones without seizuring a line, it opens to increase the impedance.

13 Pickup RC (R5, C31)
These circuits insert a high-impedance resistor and capacitor serially to prevent the line impedance from dropping by the line transformer T1.

14 Ring detectors (IC1)
These circuits detect a ring signal arriving to the line. If the input ring signal exceeds a specific voltage, the circuits output a signal having of RI the same frequency as incoming RI.

15 Line transformer (T1)
This circuit processes send/receive signals required for facsimile transmission, dial tone receive signals required for automatic dialing, and MF tone send and remote receive signals. It separates between the line and equipment in terms of DC and also keeps a balance between the line and the ground. The transformer on the UNC board for OKIFAX 5600 is covered with the shield case for the low-level receiving countermeasure.

16 Off-hook detector (IC2)
This circuit detects the off-hook state of the telephone connected to the TEL1, TEL2 through LINE terminals.

Copyright 1997, Okidata, Division of OKI America, Inc. All rights reserved. See the OKIDATA Business Partner Exchange (BPX) for any updates to this material. (http://bpx.okidata.com)

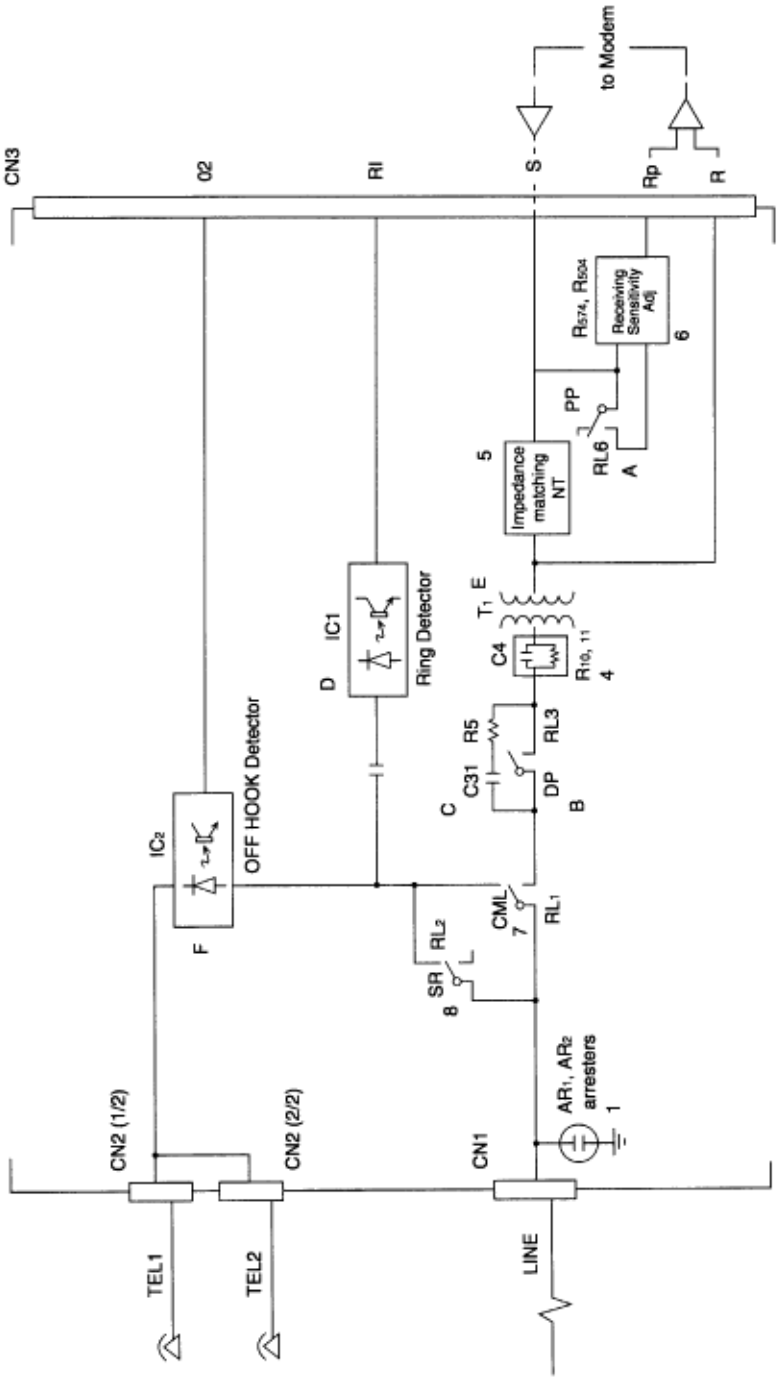
to Modem
CN3
02
RI
S
Rp
R
R574, R504
Receiving Sensitivity Adj
6
PP
RL6
A
5
Impedance matching NT
T1
E
C4
R10, 11
4
D
IC1
Ring Detector
R5
RL3
C31
DP
C
B
IC2
OFF HOOK Detector
F
CML
7
RL1
RL2
SR
8
L
AR1, AR2 arresters
1
CN2 (1/2)
CN2 (2/2)
CN1
TEL1
TEL2
LINE

Copyright 1997, Okidata, Division of OKI America, Inc. All rights reserved. See the OKIDATA Business Partner Exchange (BPX) for any updates to this material. (http://bpx.okidata.com)

The TELU board is the control board of the telephone set when the optional telephone assembly is installed on the facsimile transceiver.

1. Block diagram

Figure A3.8.1 shows a block diagram of TELU circuit.

2. General functions of this circuit are as follows:

- Speech IC
- Sending Level Adjustment
- Receiving Level Adjustment
- Sending Frequency Response Adjustment
- Side Tone Adjustment
- DC V-1 Characteristics Adjustment
- Return Loss Adjustment
- AGC (automatic gain control)
- Manual Pad
- Sending Frequency Response Adjustment
- Receiving Frequency Response Adjustment
- Handset Interface

3. Explanation of TEL circuit diagram

This section describes functional blocks of individual TEL circuit diagram.

3-1 TELU circuit diagram

TELU circuit diagram is formed by Speech IC and interface of UNC, HOOK SW and HANDSET.

1) Speech IC

The hybrid circuit is formed by Speech IC.

2) Handset Interface

- Transmitter signal route

Signal from the microphone of the handset is input to pin 15 and 16 of Speech IC. This signal is determined by the amplification factor and output to the telephone line via UNC, Hook switch and DB2 (rectifier).

- Receive signal route

Receive signal from the telephone line enters Speech IC via UNC, Hook switch and DB2 and is output to pin 2 & 3 of the speaker of the handset.

Copyright 1997, Okidata, Division of OKI America, Inc. All rights reserved. See the OKIDATA Business Partner Exchange (BPX) for any updates to this material. (http://bpx.okidata.com)

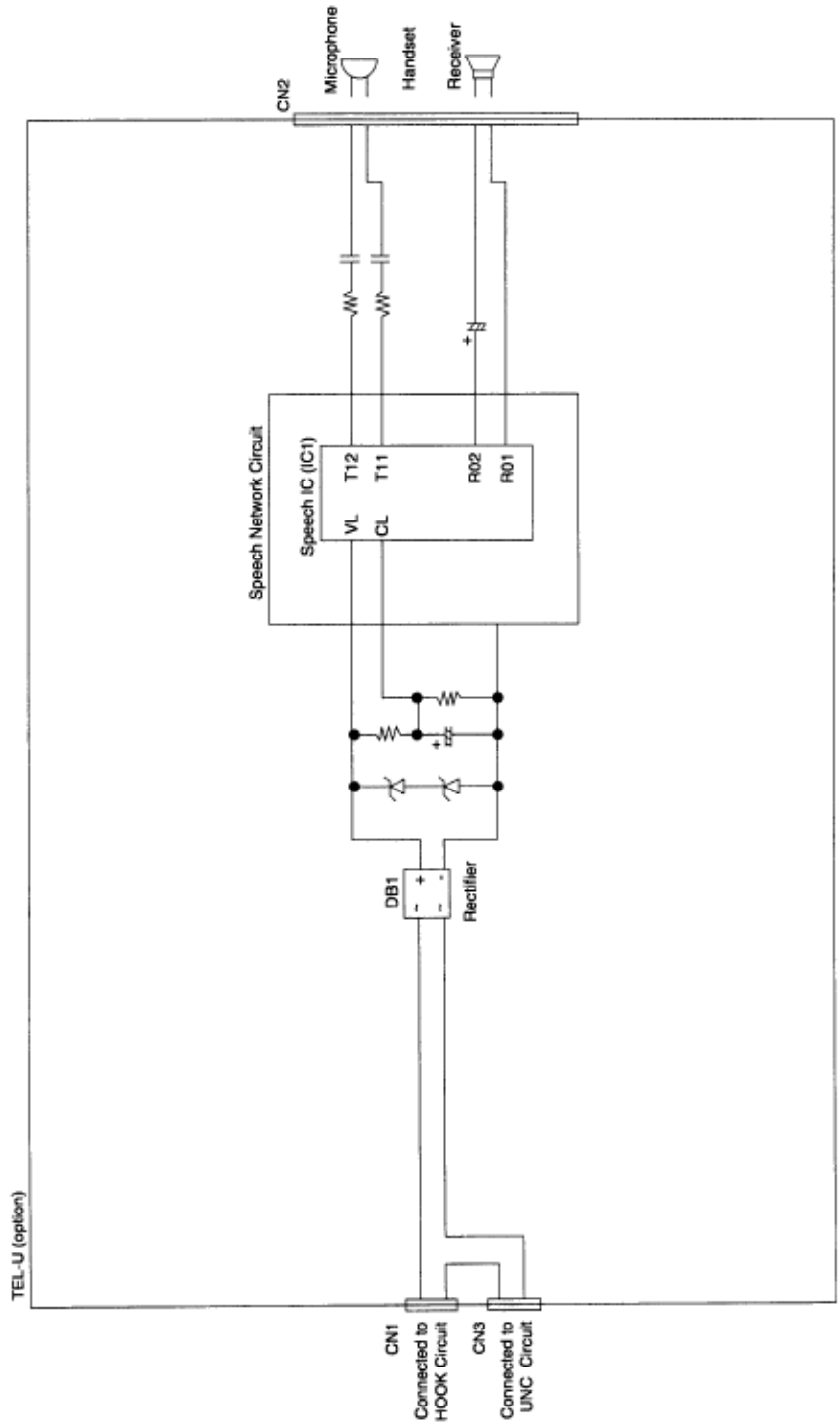
Microphone
Handset
Receiver
CN2
Speech Network Circuit
Speech IC (IC1)
T12
T11
R02
R01
VL
CL
DB1
Rectifier
TEL-U (option)
CN1
Connected to HOOK Circuit
CN3
Connected to UNC Circuit

Copyright 1997, Okidata, Division of OKI America, Inc. All rights reserved. See the OKIDATA Business Partner Exchange (BPX) for any updates to this material. (http://bpx.okidata.com)

By mounting this optional memory board (MEM/MEM-2), it can be used for the expansion memory.

1. Block diagram

Figure A3.11.1 shows a related signal of memory board.

Memory board circuit consists of the following block.

1) 512 kbyte MOS Dynamic RAM x 4 (IC3 to IC6).

Used as follows:

- Picture memory for the ECM send/receive modes.
- Picture memory for the memory transmission mode.
- Picture memory for the retransmission data.
- Picture memory for the reception in memory

2) Memory capacity

- 1 Mbyte memory board can be added for OKIFAX 5300.

The relationship between memory capacity and mounted boards are shown in the following table.

Equipment	Memory Capacity	IC3	IC4	IC5	IC6
OKIFAX 5300	1 Mbyte	Mounted	Mounted	Not mounted	Not mounted
OKIFAX 5600	1 Mbyte	Mounted	Mounted	Not mounted	Not mounted
OKIFAX 5600	2 Mbyte	Mounted	Mounted	Mounted	Mounted

Note:

Minimum one hour of back-up time during electrical interruption.

Battery back-up of image memory is provided by the optional memory card itself. This card contains a battery.

3) Image memory capacity

	Memory Condition	OKIFAX 5300 (pages)		OKIFAX 5600 LEGAL Setting
With Option Board	Standard (without option)	17		35
	1.0 Mbyte	100		120

	2.0 Mbyte	-		200

Note: No. of sheets are counted provided that ITU-T No.1 sample document is used.

No. of sheets are typical value.

Copyright 1997, Okidata, Division of OKI America, Inc. All rights reserved. See the OKIDATA Business Partner Exchange (BPX) for any updates to this material. (http://bpx.okidata.com)

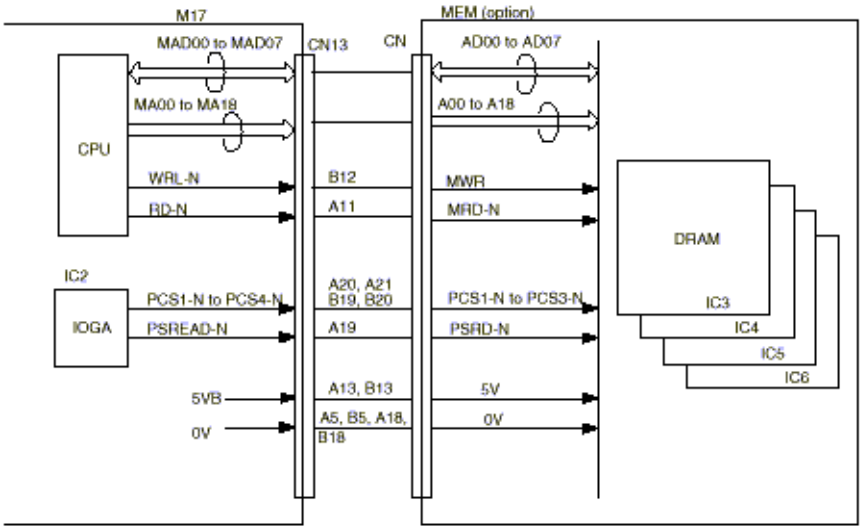

Copyright 1997, Okidata, Division of OKI America, Inc. All rights reserved. See the OKIDATA Business Partner Exchange (BPX) for any updates to this material. (http://bpx.okidata.com)

CTR board is used as an interface board of PC and FAX when PC is connected to facsimile machine.
1. Block diagram
CTR board circuit is formed by Receiver, Driver, and 1284-I/F.
Figure A3.12.1 shows related signals of CTR board.

2. Function
2.1 Summary
By installing the optional board (Bi-Centro), the following MFP (Multi-Function Peripheral) function can be realized.
Example:
• PC printer function (300/Q600 dpi) 8PPM
• PC Scanner function 300 dpi
• PC Fax Modem function (TIA/EIA Class 1)
• PC Memory function
• PC Multiplex functionDisable Enable
Interface between Fax machine and Host PC consists of three layer structure as detailed below, each sub-system can be operated at the same time by adopting a Oki-MFPI proto-col in both Fax machine and Host PC.

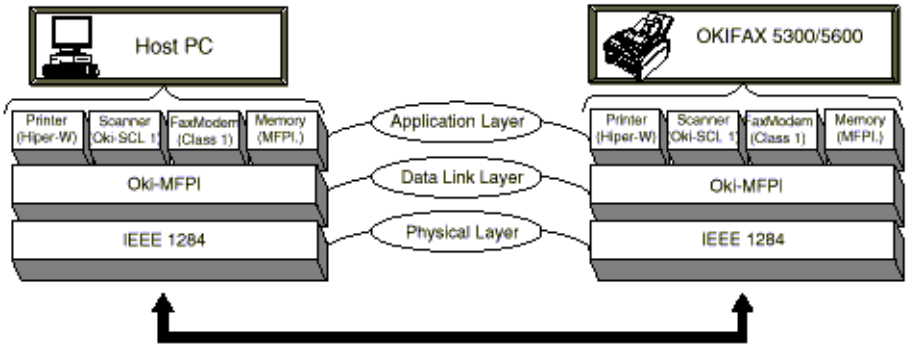

a) Application layer:
Performs a function control of each sub-system at the Host PC and Fax machine.
b) Data-Link layer:
Performs a protocol control at the Host PC and Oki-MFPI (TIA IS650 Level 1 re-quirement).
(Packetize/Unpacketize, flow control, Transfers command/data between each sub-system)
c) Physical layer:
Has a bi-directional interface control circuit which conforms to IEEE1284.
Standard mode: Compatible, Nibble
Oki special mode: MCE (Mode Change Express)

Following devices are as sub-system:
1) Printer (HIPER-W: Host based Image PrintER for Windows)
Encodes a rater image data in Host PC and transfers a data with HIPER-W emula-tion.
2) Scanner (Oki-SCL 1: Oki-Scanner Control Language 1)
Transfers and image data of document scanned in Fax machine to the Host PC with

Oki-SCL 1 command.
3) FaxModem (TIA/EIA Class 1)
Send/receive a Class 1 command between Host PC and Fax machine.
4) Memory (MFPL: Multi-Function Peripheral Language)
By using MFPL command, it is possible to display on screen of Host PC for condition of Fax machine and performs the initial registration of the telephone number used in Fax machine.

Copyright 1997, Okidata, Division of OKI America, Inc. All rights reserved. See the OKIDATA Business Partner Exchange (BPX) for any updates to this material. (http://bpx.okidata.com)

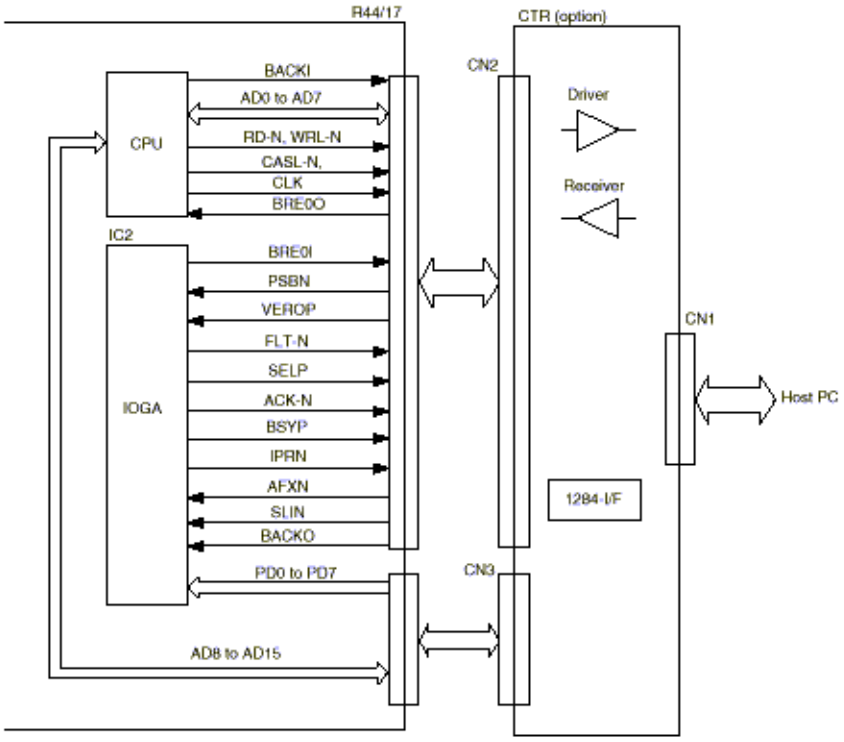

Copyright 1997, Okidata, Division of OKI America, Inc. All rights reserved. See the OKIDATA Business Partner Exchange (BPX) for any updates to this material. (http://bpx.okidata.com)

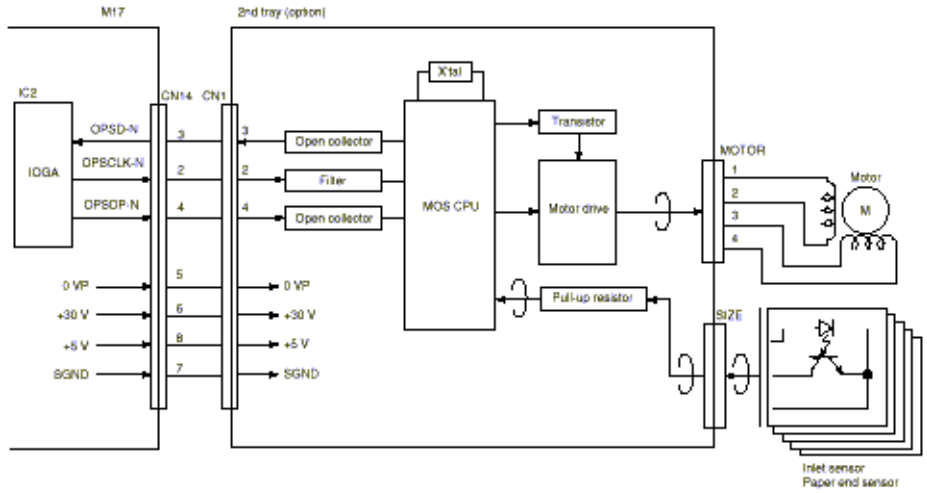

Copyright 1997, Okidata, Division of OKI America, Inc. All rights reserved. See the OKIDATA Business Partner Exchange (BPX) for any updates to this material. (http://bpx.okidata.com)

1. Block diagrm
This board is installed as the optional board for the unit.
Figure A3.13.1 shows a block diagram of the second tray (option).
2. Function
Second tray consists of the following functions:
• Paper capacity: 500 sheets
• Paper size: A4, Letter, Legal
• Paper-size selection: Automatic
• Cassette/no-cassette selection: Automatic
• Paper/no-paper selection: Automatic
• Paper route open to facsimile transceiver unit : Automatic decision
Control method:
When second tray is installed with the facsimile transceiver unit, the tray is connected to the facsimile transceiver unit by a connecting cable. The tray is controlled by the com-mand from CPU of PU (printer unit) section.

Copyright 1997, Okidata, Division of OKI America, Inc. All rights reserved. See the OKIDATA Business Partner Exchange (BPX) for any updates to this material. (http://bpx.okidata.com)

Service Manual for OF5300/5600

Chapter B Print Operation Description

This appendix describes the print operation processes and assemblies of the unit.

Copyright 1997, Okidata, Division of OKI America, Inc. All rights reserved. See the OKIDATA Business Partner Exchange (BPX) for any updates to this material. (http://bpx.okidata.com)

1) Image drum cartridge

2) Resist motor

3) Drum motor

4) LED head

5) Fuser

Copyright 1997, Okidata, Division of OKI America, Inc. All rights reserved. See the OKIDATA Business Partner Exchange (BPX) for any updates to this material. (http://bpx.okidata.com)

The image drum cartridge (I/D or EP [electro-photographic) consists of an image drum, a charger, and a developer. The cartridge forms a toner image on the drum, using an electrostatic latent image formed by the LED print head.

Copyright 1997, Okidata, Division of OKI America, Inc. All rights reserved. See the OKIDATA Business Partner Exchange (BPX) for any updates to this material. (http://bpx.okidata.com)

This resist motor is a pulse motor of 48 steps/rotation that is two-phase excited by the signal from the M17 board. It drives the hopping roller and the resist roller via two one-way clutches according to the direction of rotation.

Copyright 1997, Okidata, Division of OKI America, Inc. All rights reserved. See the OKIDATA Business Partner Exchange (BPX) for any updates to this material. (http://bpx.okidata.com)

This drum motor is a pulse motor of 48 steps/rotation that is two-phase excited by the signal from the M17 board and is the main motor of this mechanism.

Copyright 1997, Okidata, Division of OKI America, Inc. All rights reserved. See the OKIDATA Business Partner Exchange (BPX) for any updates to this material. (http://bpx.okidata.com)

Image data for each dot on a line from the M17 board is received by the shift registers and latch registers. The Letter size LED head are driven to radiate the image data on to the EP (image) drum.

Copyright 1997, Okidata, Division of OKI America, Inc. All rights reserved. See the OKIDATA Business Partner Exchange (BPX) for any updates to this material. (http://bpx.okidata.com)

The fuser consists of a heater, a heat roller, a thermister and a thermostat.

An AC voltage from the power supply board (1VP/2VP) is applied to the heater under the control of the HEAT-N signal from the M17 board. This AC voltage heats the heater. The M17 board supervises the heat roller temperature via the thermistor, and regulates the heater roller at a predetermined temperature (about 185 °C for OKIFAX 5000 series) by connecting or disconnecting the AC voltage supply to the heater.

If the heater roller temperature rises abnormally, the thermostat of the heater voltage supply circuit is activated to cut off the AC voltage supply forcibly.

Copyright 1997, Okidata, Division of OKI America, Inc. All rights reserved. See the OKIDATA Business Partner Exchange (BPX) for any updates to this material. (http://bpx.okidata.com)

OKIDATA®

Service Manual for OF5300/5600

Chapter B Print Operation Description

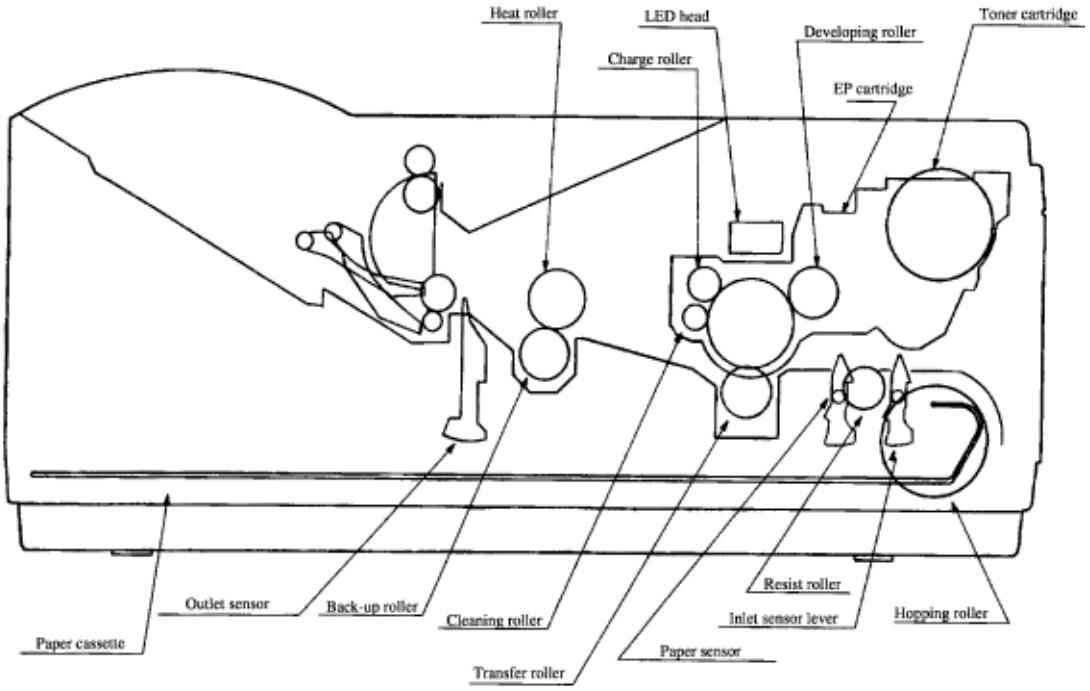

Copyright 1997, Okidata, Division of OKI America, Inc. All rights reserved. See the OKIDATA Business Partner Exchange (BPX) for any updates to this material. (http://bpx.okidata.com)

B2.2.1 Process Operations

Copyright 1997, Okidata, Division of OKI America, Inc. All rights reserved. See the OKIDATA Business Partner Exchange (BPX) for any updates to this material. (http://bpx.okidata.com)

1) Hopping and feeding

2) Charging

3) Exposure

4) Developing

5) Transfer

6) Fusing

7) Cleaning

8) Cleaning of rollers

Copyright 1997, Okidata, Division of OKI America, Inc. All rights reserved. See the OKIDATA Business Partner Exchange (BPX) for any updates to this material. (http://bpx.okidata.com)

Hopping and feeding are affected by a single resist motor in the mechanism shown below.

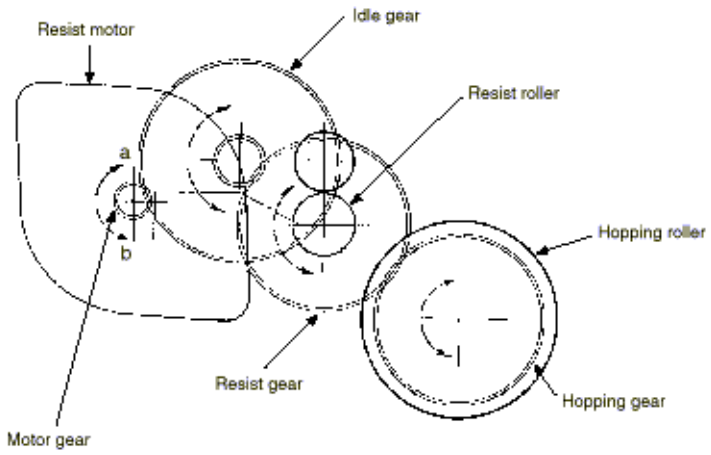

Turning the resist motor in the "a" direction drives the hopping roller. Turning the resist motor in the "b" direction drives the resist roller. The resist gear and hopping gear each contain one-way clutches, so that turning each of these gears in the reverse direction will not be transmitted to the corresponding roller.

(a) Hopping

1 Hopping turns the resist motor in the "a" direction (in the clockwise [CW] direction) and drives the hopping roller to advance the paper until the inlet sensor turns on.

(In this case, the resist gear also turns, but the resist roller is prevented from turning by the one-way clutch gear.)

2 After the paper has turned on the inlet sensor, the paper is further advanced by a predetermined length until the paper hits the resist roller. (The skew in the paper can thus be corrected.)

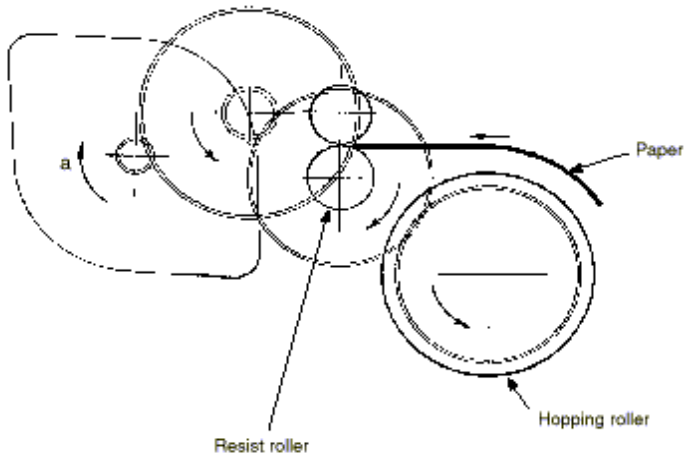

CW = Clockwise

(b) Feeding

1 After end of hopping, turning the resist motor in the "b" direction (in the counter-clockwise [CCW] direction) drives the resist roller to advance the paper. (In this case, the hopping gear also turns, but the hopping roller is prevented from turning by the one-way clutch gear.)

2 The paper is further advanced in synchrony with the print data.

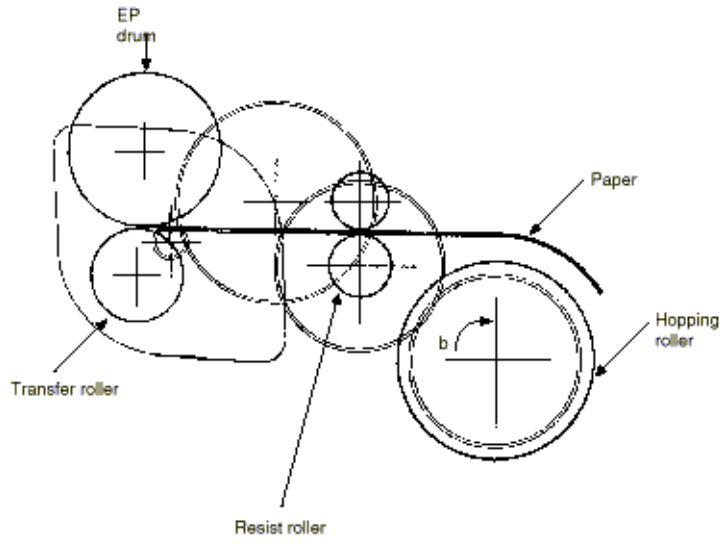

CCW = Counterclockwise

Copyright 1997, Okidata, Division of OKI America, Inc. All rights reserved. See the OKIDATA Business Partner Exchange (BPX) for any updates to this material. (http://bpx.okidata.com)

Charging is affected by applying a DC voltage to the charge roller that is in contact with the image drum surface.

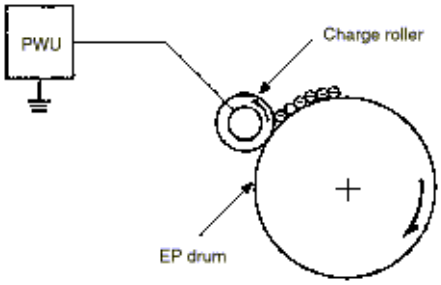

The charge roller is composed of two layers consisting of a conductive layer and a surface protective layer that has elasticity, in order to secure a good contact with the image drum. When the DC voltage (-1.35 KVDC) applied from the Power Supply Unit exceeds a threshold value, charging begins. The applied voltage is proportional to charge potential with off set of approx. -550V.

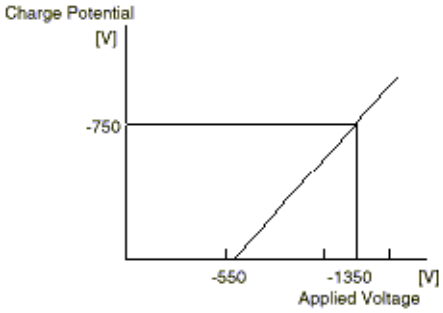

Copyright 1997, Okidata, Division of OKI America, Inc. All rights reserved. See the OKIDATA Business Partner Exchange (BPX) for any updates to this material. (http://bpx.okidata.com)

3) Exposure

Light emitted from the LED head irradiates the image drum surface with negative charges. The surface potential of the irradiated part of the image drum drops, thereby forming an electrostatic latent image associated with the image signal.

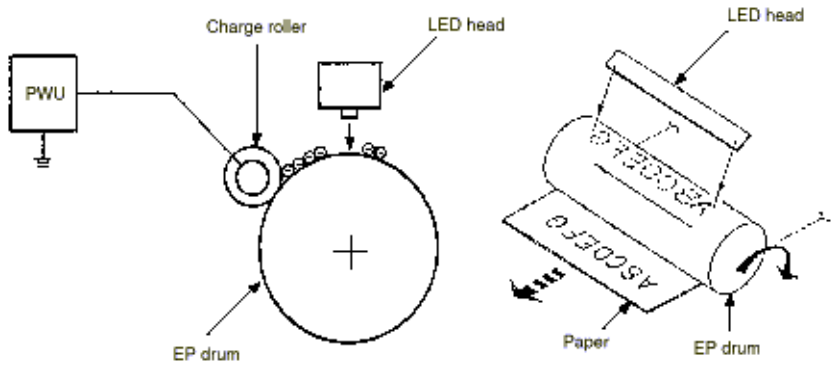

The image drum is coated with an underlayer (UL), a carrier generation layer (CGL), and carrier transfer layer (CTL) on the aluminum base. The organic photo conductor layer (OPC), comprising a CTL and a CGL, is about 20 mm thick.

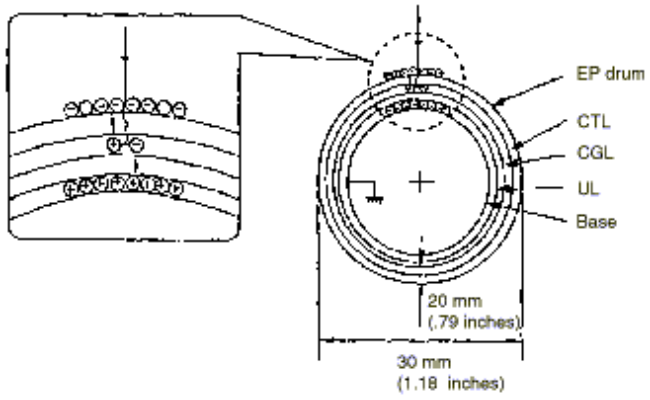

The image drum surface is charged to about -750 V by the contact charge of the charge roller.

When light from the LED head irradiates the image drum surface, the light energy generates positive and negative carriers in the CGL. The positive carriers are moved to the CTL by an electrical field acting on the image drum. Likewise, the negative carriers flow into the aluminum layer (ground).

The positive carriers moved to the CTL combine with the negative charges on the image drum surface accumulated by the contact charge of the charge roller, lowering the potential on the image drum surface. The resultant drop in the potential of the irradiated part of the image drum surface forms an electrostatic latent image on it. The irradiated part of the image drum surface is kept at about -100 V.

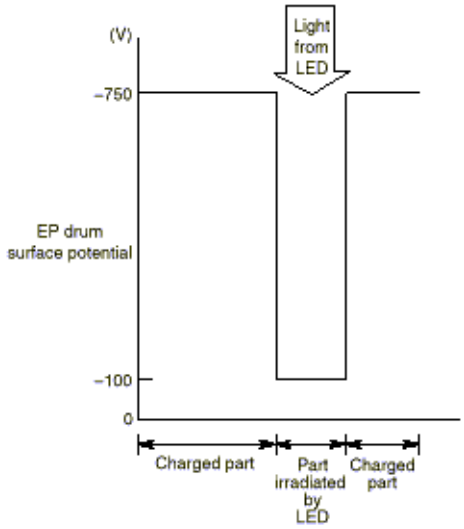

Copyright 1997, Okidata, Division of OKI America, Inc. All rights reserved. See the OKIDATA Business Partner Exchange (BPX) for any updates to this material. (http://bpx.okidata.com)

Toner is attracted to the electrostatic latent image on the image drum surface to convert it into a visible toner image. Developing takes place at the contact between the image drum and the developing roller.

1 As the toner supply roller rotates while rubbing on the developing roller, a friction charge is generated between the developing roller and the toner, allowing the toner to be attracted to the developing roller. (The developing roller surface is charges positive and the toner, negative.)

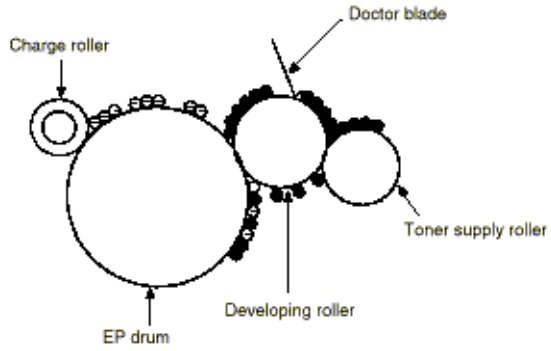

2 The toner attracted to the developing roller is scraped off by the doctor blade, forming a thin coating of toner on the developing roller surface.

3 Toner is attracted to the exposed part (low-potential part) of the image drum at the contact between the image drum and the developing roller, making the electro-static latent image visible.

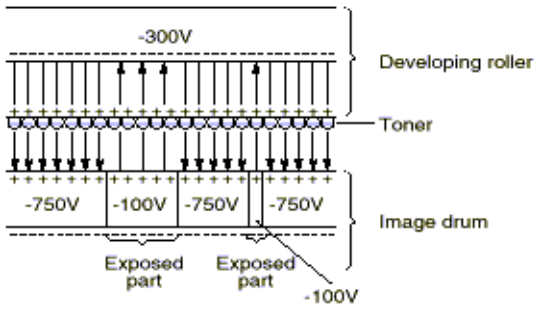

An illustration of activities at the contact point of the image drum surface and the developing roller (arrow marks denote the direction of the electric field).

Note: The toner supply roller and the developing roller are supplied with bias voltages required during the developing process as shown below. -450 VDC is supplied to the toner supply roller, -300 VDC to the developing roller.

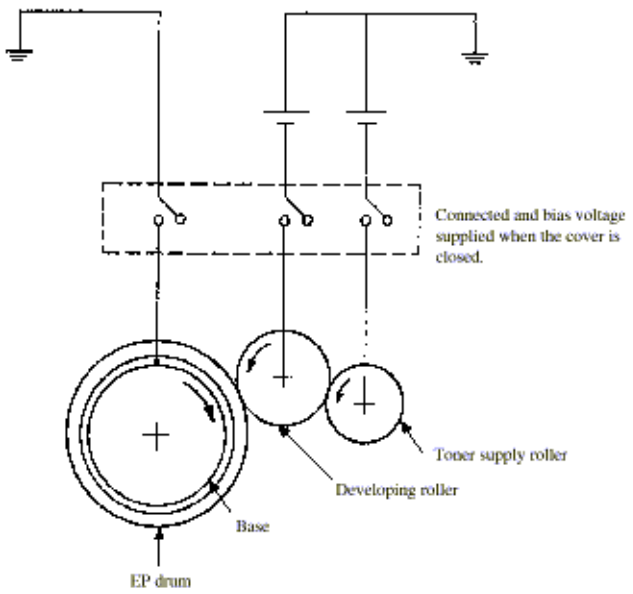

Copyright 1997, Okidata, Division of OKI America, Inc. All rights reserved. See the OKIDATA Business Partner Exchange (BPX) for any updates to this material. (http://bpx.okidata.com)

The transfer roller is composed of conductive sponge material and is designed to make the image drum surface and the paper closely into contact.

Paper is placed over the image drum surface, and a positive charge, opposite in polarity to the toner, is applied to the paper from its reverse side.

The application of a high positive voltage (+1 KVDC) from the Power Supply Unit (1VP/2VP board) to the transfer roller causes the positive charge induced on the transfer roller surface to be transferred to the paper at the contact between the transfer roller and the paper. As a result, toner charged negative that is attracted to the image drum surface is transferred to the upper side of the paper by the positive charge on the lower side of the paper.

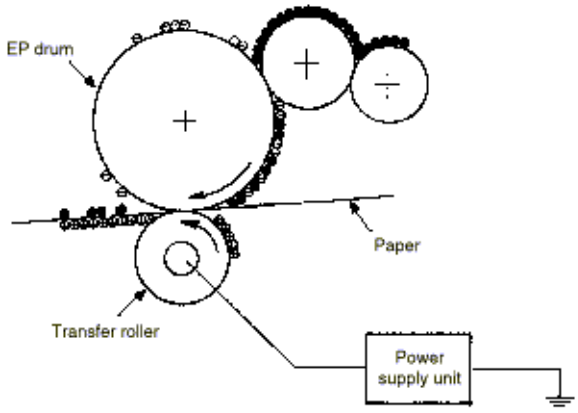

Copyright 1997, Okidata, Division of OKI America, Inc. All rights reserved. See the OKIDATA Business Partner Exchange (BPX) for any updates to this material. (http://bpx.okidata.com)

After the end of the transfer operation, the unfused toner image is fused on the paper under heat and pressure as it passes between the heater roller and the back-up roller. The heater roller with a Teflon coating incorporates a 500 W heater (Halogen lamp), which heats the heat roller.

A thermister, which is in contact with the heater roller, regulates the heater roller at a predetermined temperature (about 185 °C for OKIFAX 5000 series). A safety thermostat cuts off voltage supply to the heater by opening the thermostat in the event of abnormal rise in temperature.

The back-up roller is held under a pressure of 2.5 kg by the pressure spring at each side.

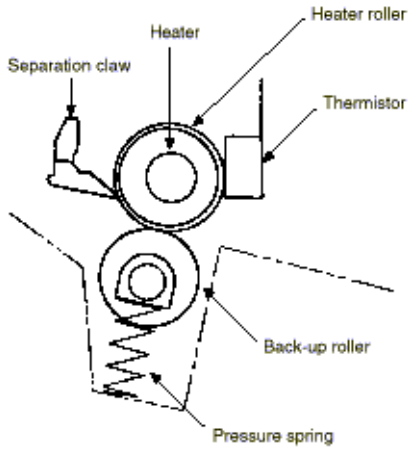

Copyright 1997, Okidata, Division of OKI America, Inc. All rights reserved. See the OKIDATA Business Partner Exchange (BPX) for any updates to this material. (http://bpx.okidata.com)

After the end of the transfer, residual toner on the image drum is attracted to the cleaning roller temporarily by static electricity to clean the image drum surface.

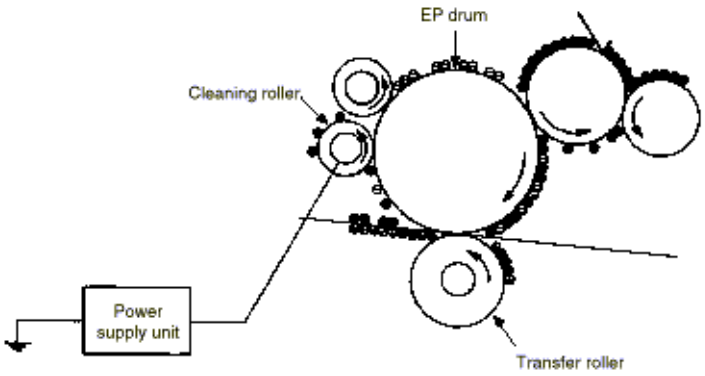

Copyright 1997, Okidata, Division of OKI America, Inc. All rights reserved. See the OKIDATA Business Partner Exchange (BPX) for any updates to this material. (http://bpx.okidata.com)

The charge roller, transfer roller and cleaning roller are cleaned in the following cases:

- In warning up at power-on time
- In warning up after the cover is opened and closed
- When the number of accumulated sheets is 10 or more and the printout operation ends

Changes in bias voltage applied to each roller move adhesive toner from the roller to the image drum and return it to the developer.

	Cleaning "NO" (V)	Cleaning "YES" (V)
DB+	-	+300 V
DB-	-300 V	-300 V
TR+	+1000 V	+1000 V
TR-	-	-750 V
CB (cleaning)	+400 V	+400 V
CH-	-1350 V	-1350 V

Copyright 1997, Okidata, Division of OKI America, Inc. All rights reserved. See the OKIDATA Business Partner Exchange (BPX) for any updates to this material. (http://bpx.okidata.com)

B2.3.1 Errors List

B2.3.2 Major Trouble Errors

B2.3.3 Recoverable Errors

Copyright 1997, Okidata, Division of OKI America, Inc. All rights reserved. See the OKIDATA Business Partner Exchange (BPX) for any updates to this material. (http://bpx.okidata.com)

The errors are listed below.

1) Major trouble errors

- Fuser error (Printer Alarm 4)
- Fan error (Printer Alarm 3)
- Paper supply error
- Paper transport system error
- Paper exit jam
- Paper size error
- 2'nd tray communication error (Printer Alarm 2)
- Cover open

2) Recoverable errors

- 2'nd tray route open
- No cassette in 2'nd tray
- No paper in 1'st cassette
- No paper in 2'nd cassette

3) Alarms (warning)

- Low toner
- Paper width error

Notes:
1. The major trouble errors do not recover after an error has been removed unless a reset is not performed.

2. A recoverable error resets automatically by itself once the cause of error has been removed. Printing is not possible while an error is existing.

3. The alarm serves as a warning only and the printing operation is performed.

Copyright 1997, Okidata, Division of OKI America, Inc. All rights reserved. See the OKIDATA Business Partner Exchange (BPX) for any updates to this material. (http://bpx.okidata.com)

B2.3.2.1 Fuser Error (Printer Alarm 4)

B2.3.2.2 Fan Error (Printer Alarm 3)

B2.3.2.4 2'nd Tray Communication Error (Printer Alarm 2)

B2.3.2.5 Cover Open

B2.3.2.3 Paper Feed Monitoring

Copyright 1997, Okidata, Division of OKI America, Inc. All rights reserved. See the OKIDATA Business Partner Exchange (BPX) for any updates to this material. (http://bpx.okidata.com)

The fuser error indicates an error in thermister on heater.

In case the fuser error occurs at the time of printing, the heater is turned off soon but the printing continues of that page.

However, if the error occurs before the write sensor is turned on, the motor stops soon.

Copyright 1997, Okidata, Division of OKI America, Inc. All rights reserved. See the OKIDATA Business Partner Exchange (BPX) for any updates to this material. (http://bpx.okidata.com)

The fan error is generated when the FANSNS signal lead goes "1" while the fan is running at full speed. Operation of the FANSNS signal when the fan is turned on is described below.

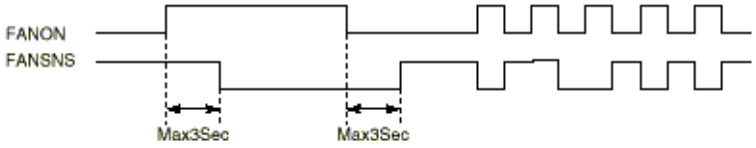

Since the fan alarm is not monitored during printing, the fan alarm does not appear from the moment the printing is started until the completion of printing operation.

In other words, the printing will continue even if the fan alarm occurs during printing.

Copyright 1997, Okidata, Division of OKI America, Inc. All rights reserved. See the OKIDATA Business Partner Exchange (BPX) for any updates to this material. (http://bpx.okidata.com)

Status	Description and Supervising Sensor	Distance
Paper supply error	Indicates monitoring error in hopping. Hopping is retried 3 times.	118 mm (4.64") or less path Length +36 (hopping) x 3
Transport system jam 1	Indicates an error in the paper transport path. Error on resist roller section. From resist ON to write sensor (PS2) ON.	30 mm (1.18") or less Inlet ~ write +20
Transport system jam 2	From inlet sensor OFF up to write sensor OFF.	44 mm (1.73") or less
Transport system jam 3	Indicates an error in the paper transport system. Error of transfer roller and/or heat roller. From write sensor ON to outlet sensor ON.	207 mm (8.15") or less Write ~ outlet +69
Paper size error	Indicates paper size other than specified one. From resist ON to inlet sensor OFF.	Recording paper +/- 45 mm (1.77")
Paper outlet jam 1	Supervises slipping of the recording paper. From outlet sensor ON to OFF.	Recording paper +/- 45 mm (1.77")
Paper outlet jam 2	Supervises jamming at the near paper outlet. From outlet sensor ON to OFF. When a crumpled recording paper is detected, the outlet sensor is set to "OFF" earlier than usual.	135 mm (5.31") or less: NG

Copyright 1997, Okidata, Division of OKI America, Inc. All rights reserved. See the OKIDATA Business Partner Exchange (BPX) for any updates to this material. (http://bpx.okidata.com)

This error is generated if on sending a command to the 2'nd tray is returned no-status (40s) or an undefined status. However, in case there is no status when reset, it will be considered that the 2'nd tray is not mounted.

Copyright 1997, Okidata, Division of OKI America, Inc. All rights reserved. See the OKIDATA Business Partner Exchange (BPX) for any updates to this material. (http://bpx.okidata.com)

Cover open sensor "0" indicates an open cover.

When the cover is closed the CU (control unit) section sends the reset signal and processes in the same way as if the power has been turned on.

Copyright 1997, Okidata, Division of OKI America, Inc. All rights reserved. See the OKIDATA Business Partner Exchange (BPX) for any updates to this material. (http://bpx.okidata.com)

The three recoverable errors are listed in the table below.

Status	Description of Supervising Sensor
2'nd tray route open	Paper supply route from the option 2'nd tray to the main body is open, recording paper of the 1'st tray is being replaced.
No paper 1'st cassette	No paper has been detected by the 1'st tray's paper sensor. No paper has been detected by paper sensor in "1" state.
No paper 2'nd cassette	Response from the option tray indicated no paper in 2'nd tray.

Copyright 1997, Okidata, Division of OKI America, Inc. All rights reserved. See the OKIDATA Business Partner Exchange (BPX) for any updates to this material. (http://bpx.okidata.com)

Composition

Operation

Operation during toner full state

Operation during toner low state

Low Toner Alarm

Copyright 1997, Okidata, Division of OKI America, Inc. All rights reserved. See the OKIDATA Business Partner Exchange (BPX) for any updates to this material. (http://bpx.okidata.com)

The device consists of the stirring gear which rotates at a constant rate, the stirring bar and the magnet on the stirring bar. The stirring bar rotates through the link on the protrusion in the stirring gear.

The configuration of stirring bar in the figure below may differ. The principle of toner detection, however, remains the same.

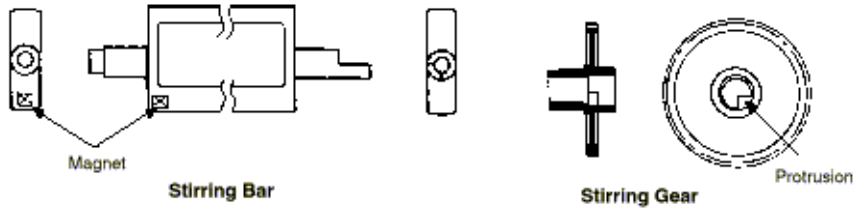

Copyright 1997, Okidata, Division of OKI America, Inc. All rights reserved. See the OKIDATA Business Partner Exchange (BPX) for any updates to this material. (http://bpx.okidata.com)

Toner Low is detected by monitoring the time interval between the encounter of the magnet set on the sensor lever and the magnet on the stirring bar.

Copyright 1997, Okidata, Division of OKI America, Inc. All rights reserved. See the OKIDATA Business Partner Exchange (BPX) for any updates to this material. (http://bpx.okidata.com)

Operation during toner full state

- The stirring bar rotates due to interlocking with the stirring gear.
- Even when the magnet on the stirring bar reaches the maximum height, since the other side is being dipped in the toner, the stirring bar is pushed by the stirring gear.

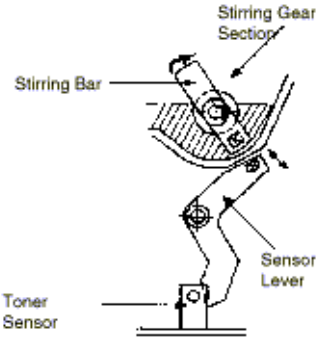

Copyright 1997, Okidata, Division of OKI America, Inc. All rights reserved. See the OKIDATA Business Partner Exchange (BPX) for any updates to this material. (http://bpx.okidata.com)

Operation during toner low state • When the stirring bar reaches the maximum height, since there is no resistance provided by the toner on the other side, it falls to the minimum height due to its own weight. Because of this, the time interval during which it is in encounter with the magnet of the sensor lever becomes long. By monitoring this time interval, toner low can be detected.	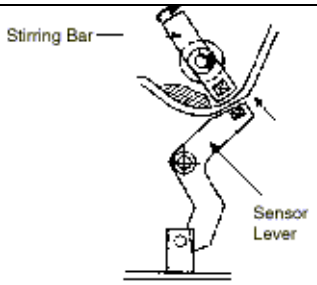

Copyright 1997, Okidata, Division of OKI America, Inc. All rights reserved. See the OKIDATA Business Partner Exchange (BPX) for any updates to this material. (http://bpx.okidata.com)

A check for low toner is carried out at all times when the drum is rotating (rotation in opposite direction is excluded).

- The toner sensor is not monitored while the drum motor is in halt.

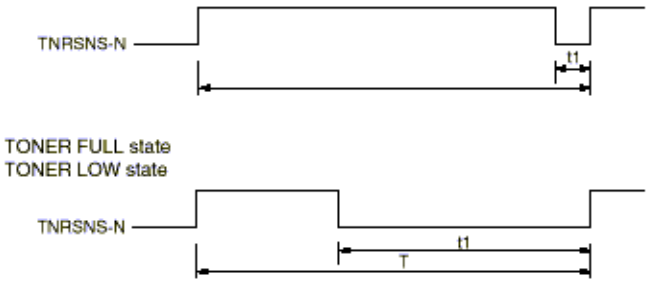

- When the toner low state is detected 2 times consecutively, Toner Low is established.
- When the toner full state is detected 2 times consecutively, Toner Low is canceled.
- When there is no change with the toner sensor for 2 cycles (6.5 sec. x 2) or more, then the Toner Sensor Alarm is activated.

Printing Speed	T	t1 (Toner Exists)	Remarks
8 ppm	3.2 sec.	0.16 - 1.00 sec.	OKIFAX 5000 series

Copyright 1997, Okidata, Division of OKI America, Inc. All rights reserved. See the OKIDATA Business Partner Exchange (BPX) for any updates to this material. (http://bpx.okidata.com)

Status	Description and Supervising Sensor	Distance
Paper supply error	Indicates monitoring error in hopping. Hopping is retried 3 times	118 mm (4.64") or less path Length +36 (hopping) x 3
Transport system jam 1	Indicates an error in the paper transport path. Error on resist roller section. From resist ON to write sensor (PS2) ON.	30 mm (1.18") or less Inlet - write +20
Transport system jam 2	From inlet sensor OFF up to write sensor OFF.	44 mm (1.73") or less
Transport system jam 3	Indicates an error in the paper transport system. Error of transfer roller and/or heat roller. From write sensor ON to outlet sensor ON.	207 mm (8.15") or less Write - outlet +69
Paper size error	Indicates paper size other than specified one. From resist ON to inlet sensor OFF.	Recording paper +/- 45 mm (1.77")
Paper outlet jam 1	Supervises slipping of the recording paper. From outlet sensor ON to OFF.	Recording paper +/- 45 mm (1.77")
Paper outlet jam 2	Supervises jamming at the near paper outlet. From outlet sensor ON to OFF. When a crumpled recording paper is detected, the outlet sensor is set to "OFF" earlier than usual.	135 mm (5.31") or less: NG

Copyright 1997, Okidata, Division of OKI America, Inc. All rights reserved. See the OKIDATA Business Partner Exchange (BPX) for any updates to this material. (http://bpx.okidata.com)

Service Manual for OF5300/5600

Chapter C Circuit Diagrams

he OKIFAX 5300 and OKIFAX 5600 Circuit Diagrams contain component level repair information and are OKIDATA proprietary.

Copyright 1997, Okidata, Division of OKI America, Inc. All rights reserved. See the OKIDATA Business Partner Exchange (BPX) for any updates to this material. (http://bpx.okidata.com)

OKIDATA

Service Manual for OF5300/5600

Chapter D Illustrated Parts List

ASSEMBLY

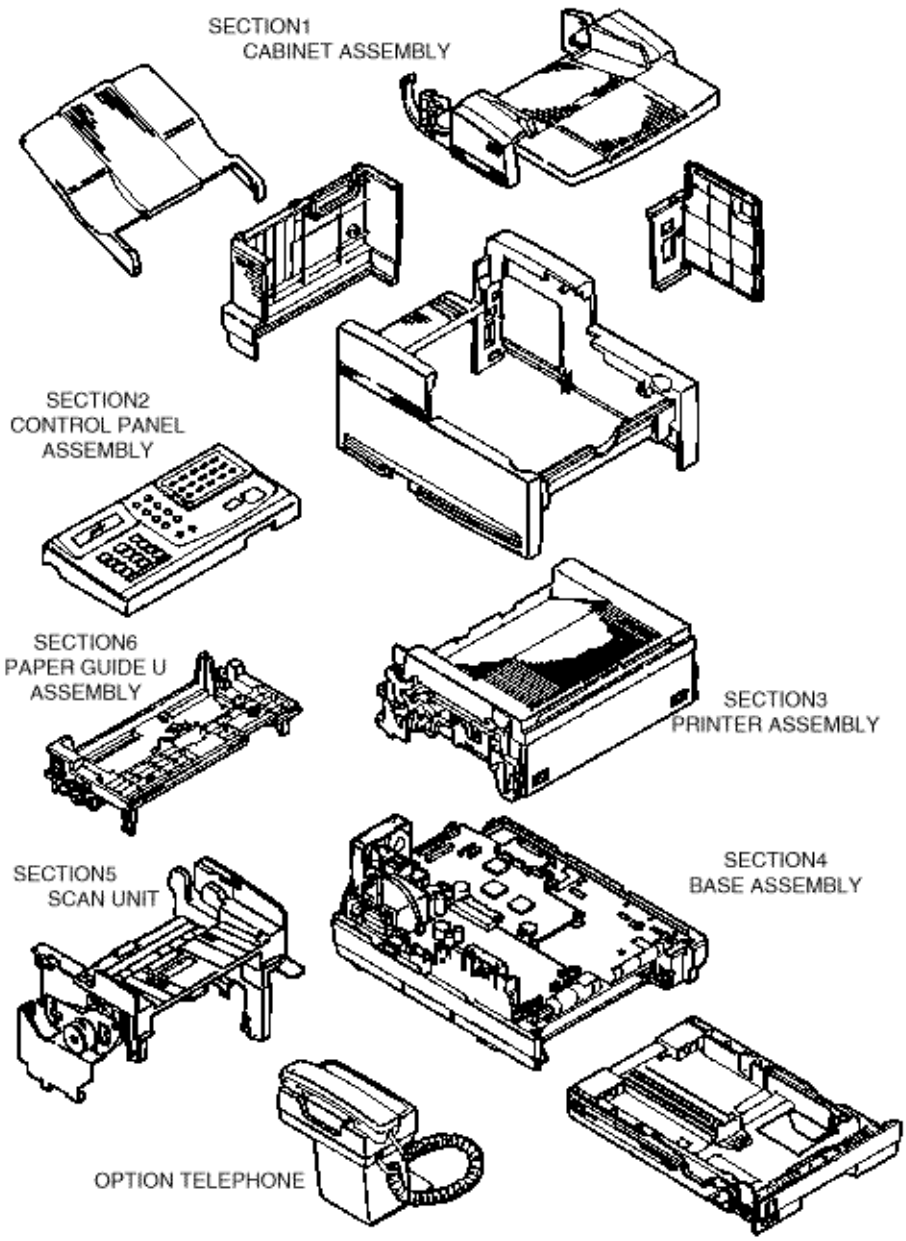

Copyright 1997, Okidata, Division of OKI America, Inc. All rights reserved. See the OKIDATA Business Partner Exchange (BPX) for any updates to this material. (http://bpx.okidata.com)

OKIDATA

Service Manual for OF5300/5600

Chapter D Illustrated Parts List

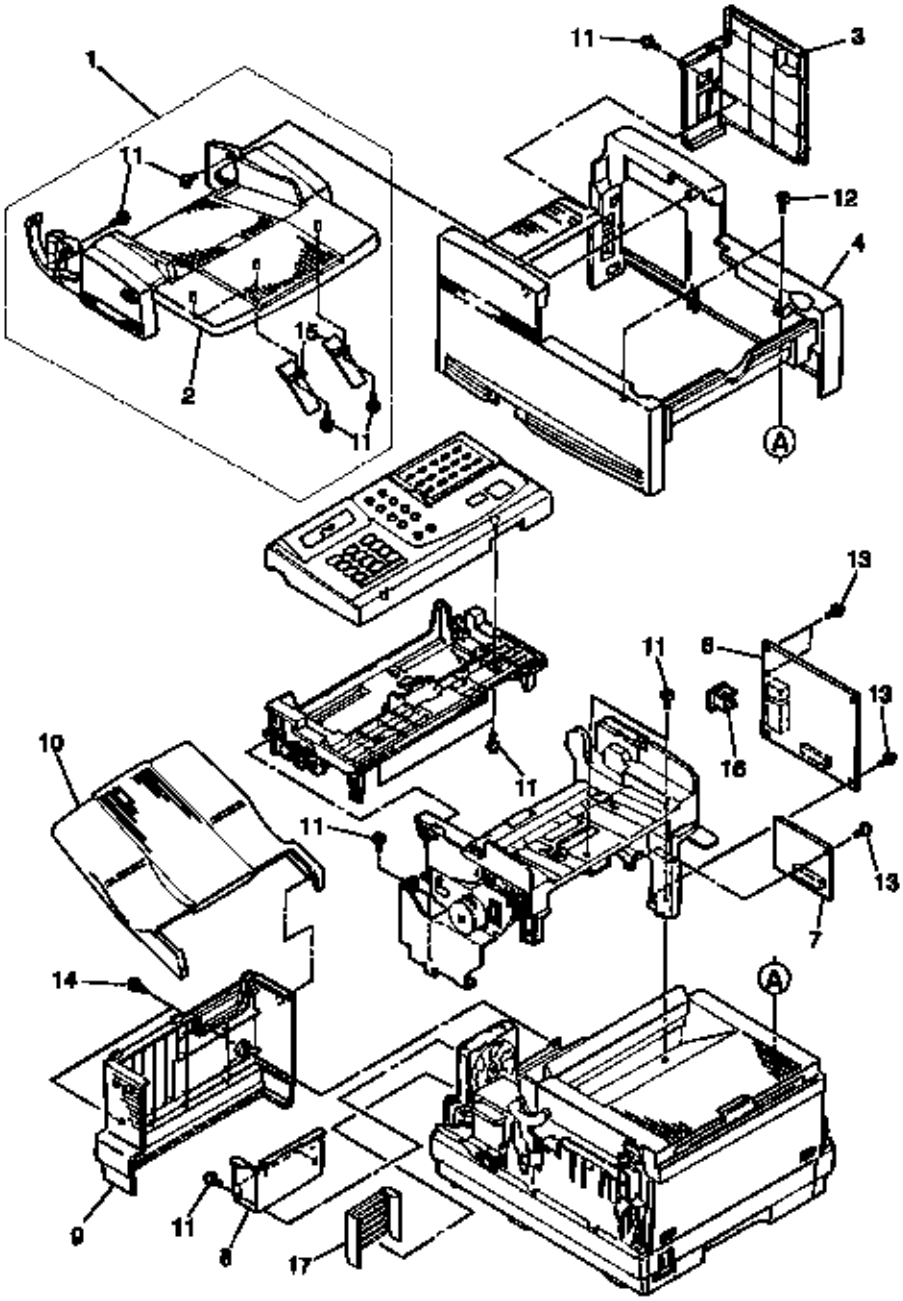

Rev.	No.	Oki parts Number	Description	Q'ty	Remarks

	1a	1PA4120-1079G1	Hopper: Document assy.	1	50607301 RSPL
	2a	2PP4120-1084P1	Tray: Sub Hopper	1	50220901 RSPL
	3a	2PP4120-1091P1	Cover: NCU	1	53075901 RSPL
	4a	1PP4120-1089P1	Cover: Main	1	53075801 RSPL
	5a	2PA4083-6130G1	Guide: Manual Feed Assy (Gray)	1	51011001 RSPL
	6a	40044501	Board-UNC	1	40044501 RSPL
	6f	40044502	Board: UNC	1	40044502 RSPL
	7	40274601	Board: S34 (OF5600)	1	40274601 RSPL
	8	3PP4120-1088P1	Plate: Partition	1	51019501 RSPL
	9a	1PP4120-1090P1	Cover: Rear	1	5307601 RSPL
	10	1PP4120-1093P1	Tray: Stacker	1	50221001 RSPL
	11	N/A	Screw		N/A
	12	N/A	Screw		N/A
	13	N/A	Screw		N/A
	14	4PB4120-1136P1	Screw: Thumb	2	50317601 RSPL
	15	4PP4120-1161G1	Guide: Assist	3	51019601 RSPL
	16	223A7010P003	Cover: Modular Cap	1	53078001 RSPL
	17	40275501	Plate-guard	1	40275501 RSPL

Copyright 1997, Okidata, Division of OKI America, Inc. All rights reserved. See the OKIDATA Business Partner Exchange (BPX) for any updates to this material. (http://bpx.okidata.com)

OKIDATA

Service Manual for OF5300/5600

Chapter D Illustrated Parts List

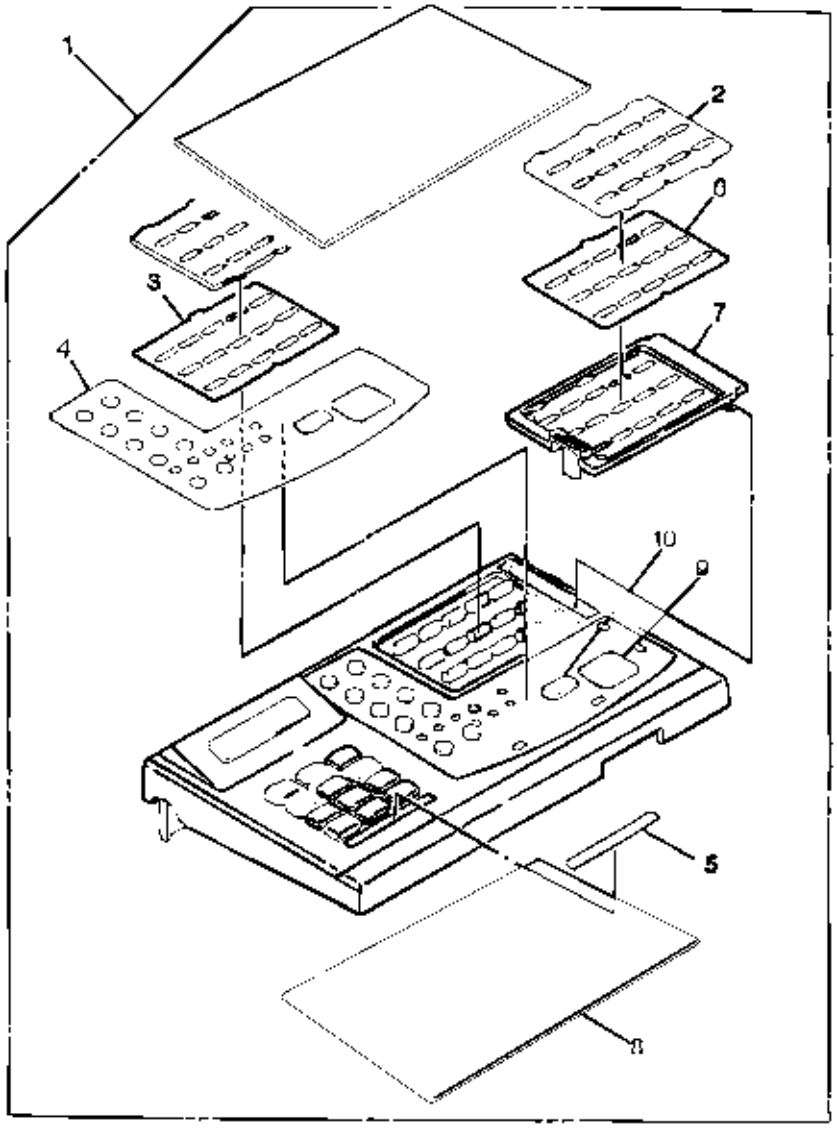

Rev.	No.	Oki parts Number	Description	Q'ty	Remarks
	1	40105301	Unit: Op Panel (OF5300)	1	40105301 RSPL
	1b	40079101	Unit: Op Panel (OF5600)	1	40079101 RSPL
	2	4PB4120-1074P1	Film: One-touch Cover	1	52203301 RSPL

	3	4PB4120-1073P101	Sheet: One-touch (L)	1	52081310 RSPL
	4a	40047110	Sheet-F-050V	1	N/A
	4d	40076810	Sheet-F-175V	1	N/A
	5	4PB4014-4776P201	Label: Ten Key (OK)	1	N/A
	6a	40047001	Sheet: One Touch (OF5300)	1	53077901 RSPL
	7a	1PP4120-1111P1	Cover: One-touch Cover-175	1	53076101 RSPL
	7b	1PP4120-1072P1	One-touch Cover-175	1	53076101 RSPL
	8	N/A	Board: Op Panel Control (05W)	1	N/A
	9a	N/A	Button-Start (S)	1	N/A
	10a	N/A	Button-Stop (S)	1	N/A

Copyright 1997, Okidata, Division of OKI America, Inc. All rights reserved. See the OKIDATA Business Partner Exchange (BPX) for any updates to this material. (http://bpx.okidata.com)

OKIDATA

Service Manual for OF5300/5600

Chapter D Illustrated Parts List

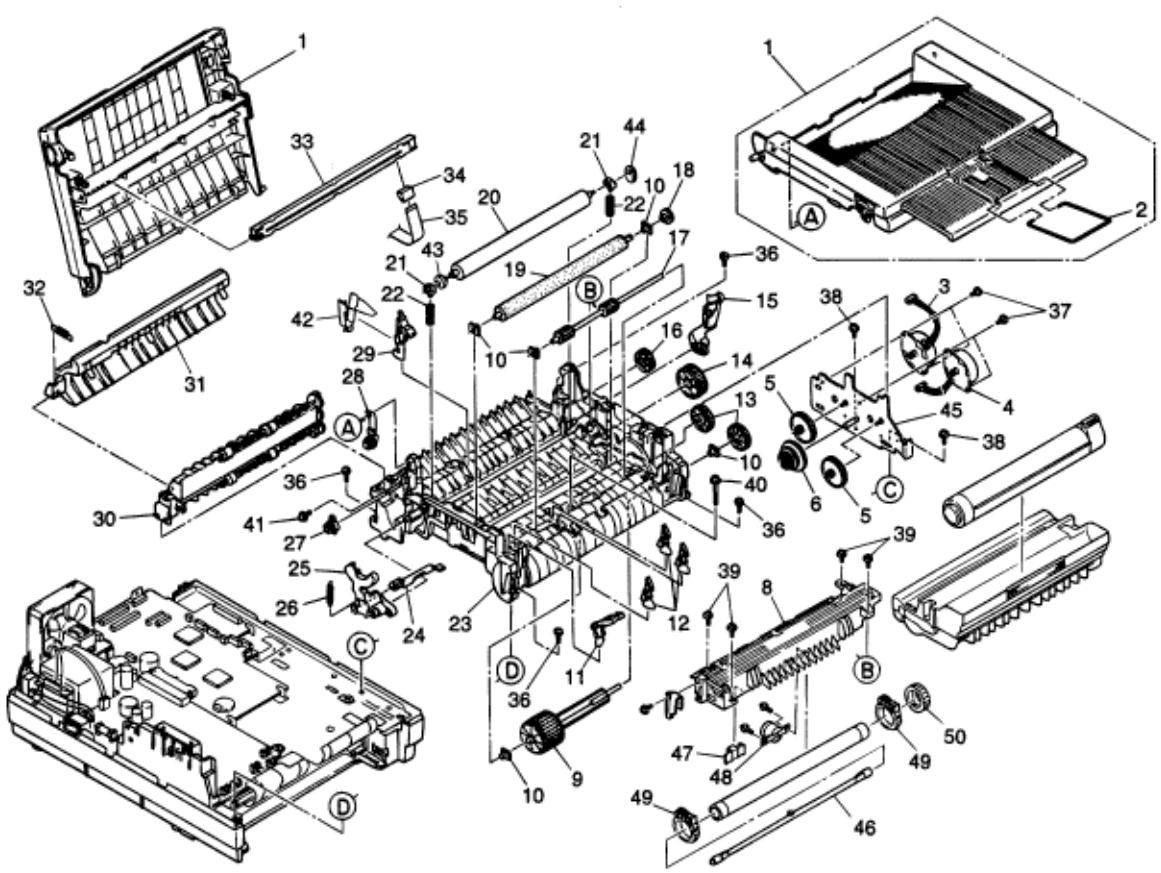

Rev.	No.	Oki parts Number	Description	Q'ty	Remarks
	1	2PA4120-1214G1	Cover: Stacker Assy	1	53077801 RSPL
	2	4PB3517-1567P1	Wire: Guide	1	51013801 RSPL
	3	4YB4120-1117P1	Motor: (Main)	1	56512701 RSPL
	4	4YB4120-1118P1	Motor: Registration	1	56512601 RSPL
	5	4PP4083-2593P1	Gear: Stepper Motor Idle	1	51225701 RSPL
	6	3PP4083-6076P1	Gear: Reduction	1	50220801 RSPL
	8a	2YX4120-1128G1	Fusing: Unit Assy (120V)	1	51229301 RSPL
	8b	2YX4120-1128G2	Fusing: Unit Assy (230V)	1	50220802 RSPL
	9	3PA4122-1295G1	Shaft: Hopping Roller Assy	1	50219601 RSPL
	10	4PP4083-6022P2	Bearing	5	51607402 RSPL
	11	4PP4083-6086G1	Sensor: Toner	1	50405501 RSPL
	12	4PP4083-6083P1	Plate: Sensor (Inlet)	3	51010701 RSPL
	13	4PB4083-6024P1	Gear: One-way Clutch	2	51228901 RSPL
	14	4PP4083-6080P1	Gear: Fuser Roller Idle	1	51229101 RSPL
	15	3PP4083-6054P1	Lever: Reset (R)	1	50805901 RSPL

	16	4PP4083-6081P1	Gear: Eject Roller Idle	1	51229201 RSPL
	17	3PB4083-6030P1	Roller: Registration	1	53342501 RSPL
	18	4PP4083-6042P1	Gear: Transfer Roller	1	51229001 RSPL
	19	4YB5084-7640P1	Roller: Transfer	1	50409301 RSPL
	20	3PB4083-6064P2	Roller: Back-up	1	53343701 RSPL
	21	4PP4083-6052P1	Bushing: Pressure Roller	2	51607601 RSPL
	22	4PP4083-6065P1	Spring: Bias	2	50925301 RSPL
	23	1PP4083-6035G001	Base: Lower Sub Assy	1	50223201 RSPL
	24	3PP4083-6058P1	Arm: Cover Open	1	53068901 RSPL
	25	3PP4083-6053P1	Lever: Reset (L)	1	50805801 RSPL
	26	4PP4083-6057P1	Spring: Stacker Cover Reset	1	50924201 RSPL
	27	4PB4083-6197P1	Gear: Stacker Cover Damper	1	51229401 RSPL
	28	4PP4083-6191G1	Arm: Stacker Cover Damper	1	53069101 RSPL
	29	4PA4083-6025G1	Plate: Sensor (Outlet)	1	51010802 RSPL
	30	2PA4120-1129G1	Roller: Exit Assy.	1	50409901 RSPL

Copyright 1997, Okidata, Division of OKI America, Inc. All rights reserved. See the OKIDATA Business Partner Exchange (BPX) for any updates to this material. (http://bpx.okidata.com)

OKIDATA

Service Manual for OF5300/5600

Chapter D Illustrated Parts List

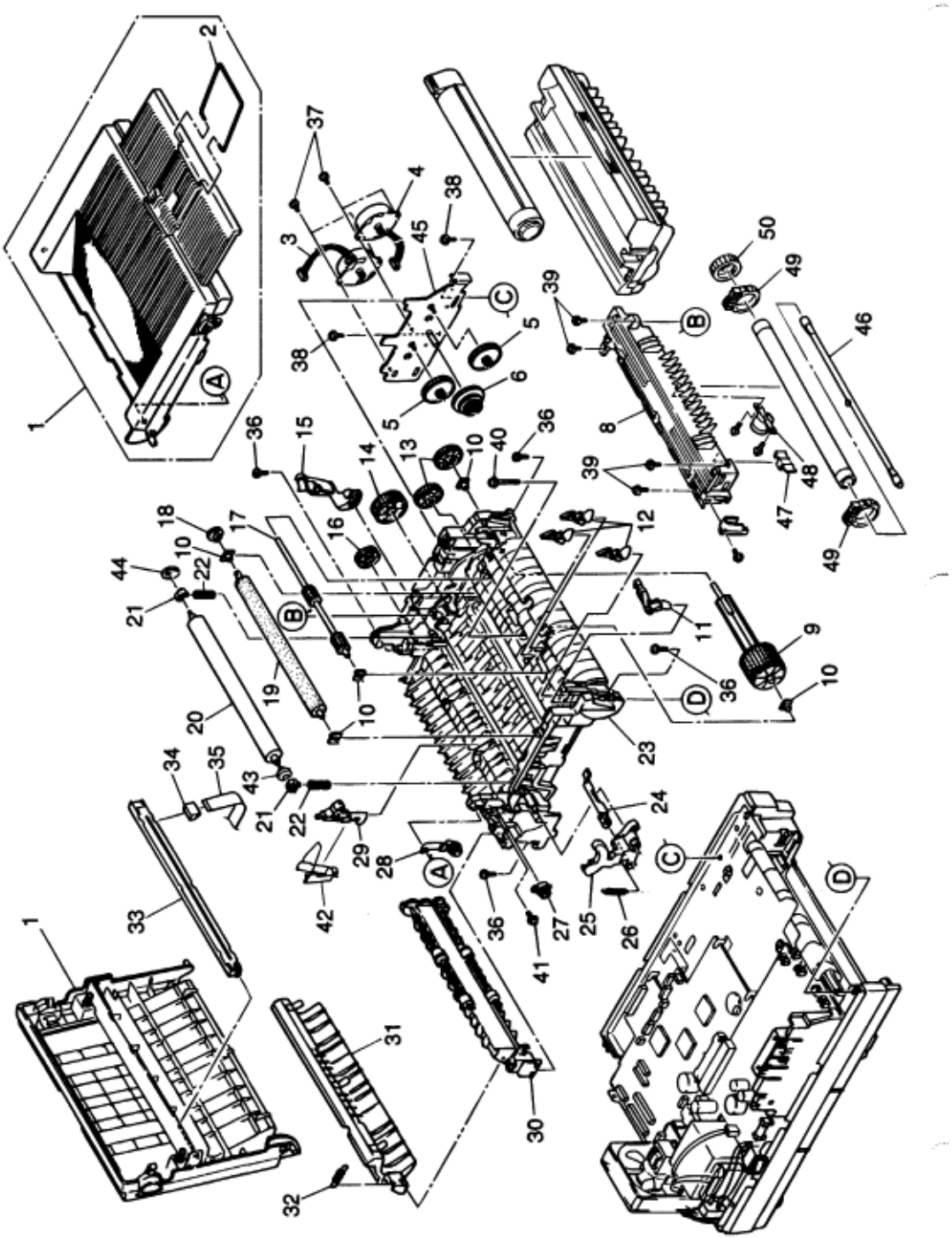

Rev.	No.	Oki parts Number	Description	Q'ty	Remarks
	31	2PA4120-1085G1	Guide: Release Assy.	1	51019201 RSPL
	32	4PP4120-1087P1	Spring: Release	1	50930001 RSPL
	33	4YA4116-1228G1	LED Head (1228G10	1	56112101 RSPL
	34	224A1286P0140	Connector: LED Cable	1	56730201 RSPL
	35	4YX4120-1124G1	Cable: LED Head Assy	1	56632401 RSPL
	36	N/A	Screw		N/A
	37	N/A	Screw		N/A
	38	N/A	Screw		N/A
	39	N/A	Screw		N/A
	40	N/A	Screw		N/A
	41	N/A	Screw		N/A
	42	4PA4120-1170G1	Wire: Sensor Assy.	1	56633001 RSPL
	43	4PP4120-1209P1	Washer: B	1	50517001 RSPL
	44	4PP4120-1210P1	Washer: C	1	50517201 RSPL
	45	3PP4083-6071G001	Bracket: Motor	1	51709901 RSPL
	46a	N/A	Halogen Lamp (Q)-F120	1	N/A
	46b	N/A	Halogen Lamp (Q)-F230	1	N/A
	47	N/A	Sensor: Heat	1	N/A
	48	N/A	Thermostat A	1	N/A
	49	N/A	Bearing: B	2	N/A
	50	N/A	Gear: A	1	N/A

Copyright 1997, Okidata, Division of OKI America, Inc. All rights reserved. See the OKIDATA Business Partner Exchange (BPX) for any updates to this material. (http://bpx.okidata.com)

OKIDATA

Service Manual for OF5300/5600

Chapter D Illustrated Parts List

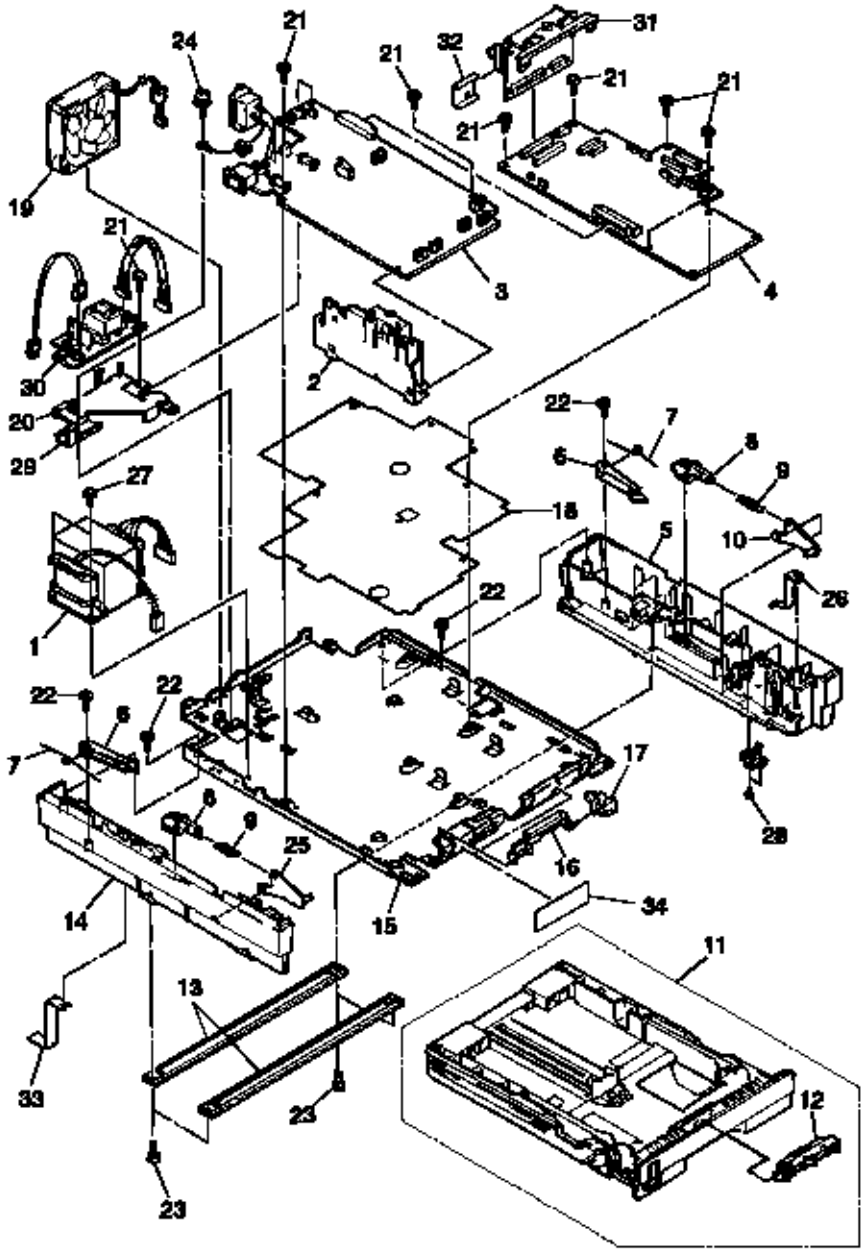

Rev.	No.	Oki parts Number	Description	Q'ty	Remarks
	1a	4YB4049-7082P1	Transformer: 120 V	1	56414201 RSPL
	1b	4YB4049-7083P1	Transformer: 230 V	1	56414001 RSPL
	2	3PA4083-6090G1	Assy: Contact	1	56730001 RSPL

	3a	40035901	PWR Unit-ACDC DROP (120V)	1	40035901 RSPL
	3b	40035902	PWR Unit-ACDC DROP (230V)	1	40035902 RSPL
	4a	40050803	Board: M17-3	1	40050803 RSPL
	5	2YX4076-7012G001	Guide: Cassette (R) Assy	1	1024301 RSPL
	6	3PP4083-7653P1	Lever: Lock Cassette	2	50808401 RSPL
	7	4PP4083-7655P1	Spring: Cassette Lock	2	50929501 RSPL
	8	4PP4122-1170P1	Block: Link Pull	2	53345201 RSPL
	9	4PP4083-7666P1	Spring: Sheet	2	50929901 RSPL
	10	4PP4083-7658G1	Link: Sheet (R)	1	50808601 RSPL
	11	1PA4120-1162G1	Cassette: Paper Assy (Gray)	1	50110501 RSPL
	12	3PP4083-5663G1	Frame: Separator Assy.	1	53345601 RSPL
	13	3PP4083-7660P1	Beam	2	51608801 RSPL
	14	2PA4076-7011G001	Guide: Cassette (L) Assy.	1	51024201 RSPL
	15	1PP4120-1078P001	Plate: Base	1	51024401 RSPL
	16	3PP4083-6154P1	Plate: Cassette Sensor	1	51011501 RSPL
	17	4PP4083-7667P1	Plate: Paper Supply Sensor	1	51019701 RSPL
	18	2PB4120-1103P1	Insulator	1	51711301 RSPL
	19	4YB4120-1119P1	Motor: Fan	1	56512801 RSPL
	20	40234201	Locking Card Spacer	1	N/A
	21	N/A	Screw		N/A
	22	N/A	Screw		N/A
	23	N/A	Screw		N/A
	24	N/A	Screw		N/A
	25	4PP4083-7657G1	Link: Sheet (L)	1	50808501 RSPL
	26	4PP4083-762P1	Plate: FG C	1	51023701 RSPL
	28	N/A	Screw		N/A
	29	40088401	Bracket-SPSU		N/A
	30a	4YB4049-1876P001	Board-SPSU (120V)		N/A

Copyright 1997, Okidata, Division of OKI America, Inc. All rights reserved. See the OKIDATA Business Partner Exchange (BPX) for any updates to this material. (http://bpx.okidata.com)

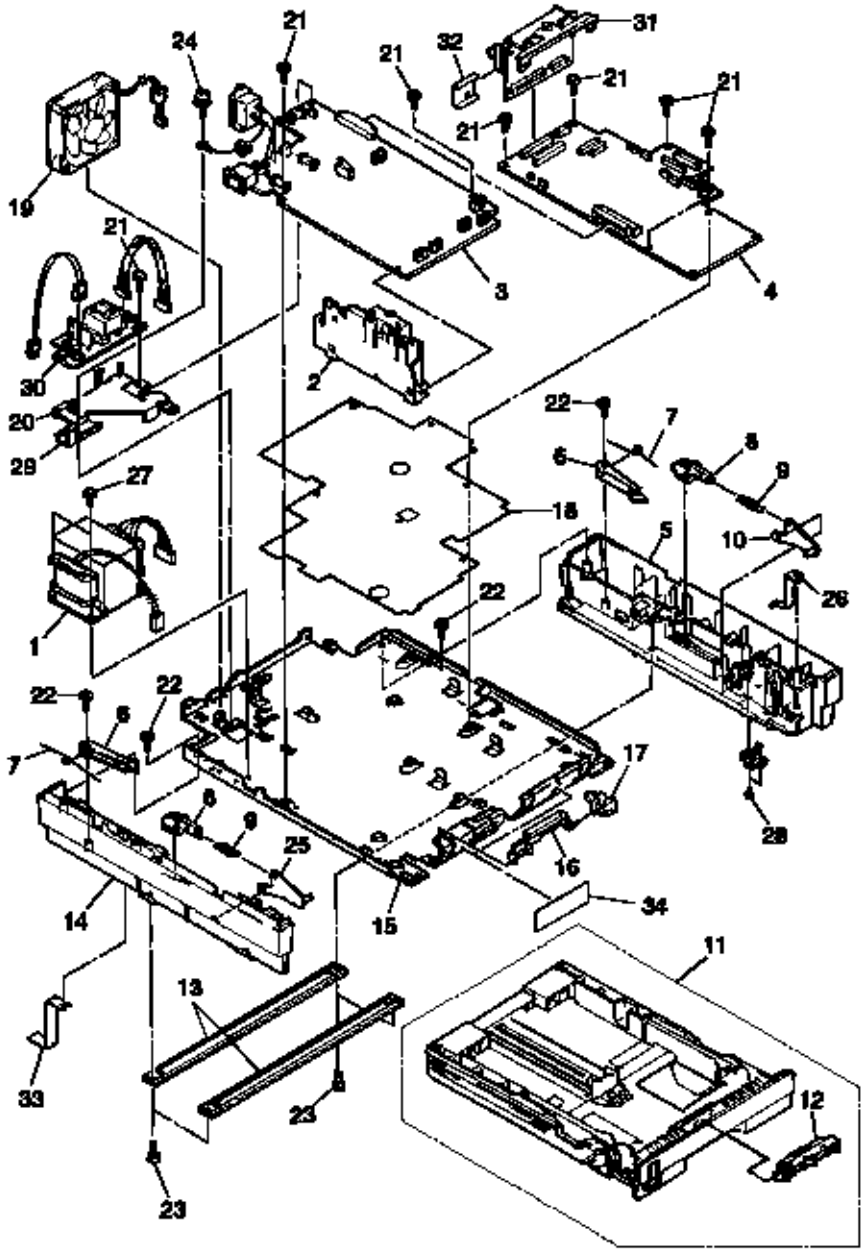

Rev.	No.	Oki parts Number	Description	Q'ty	Remarks
	30b	4YB4049-1878P00 1	Board-SPSU (230V)	1	40123401 RSPL

	31	40123401	Plate: Assembly (PC Interface) (OF5600)	1	51024001 RSPL
	32	4PP4120-1187P1	Plate: Earth (PCFX) (OF5600)	1	51023601 RSPL
	33	4PP4083-7665P001	FG Plate D	1	51023601 RSPL
	34	4YC4061-5115P001	Tape: Teflon	2	52202601 RSPL

Copyright 1997, Okidata, Division of OKI America, Inc. All rights reserved. See the OKIDATA Business Partner Exchange (BPX) for any updates to this material. (http://bpx.okidata.com)

OKIDATA

Service Manual for OF5300/5600

Chapter D Illustrated Parts List

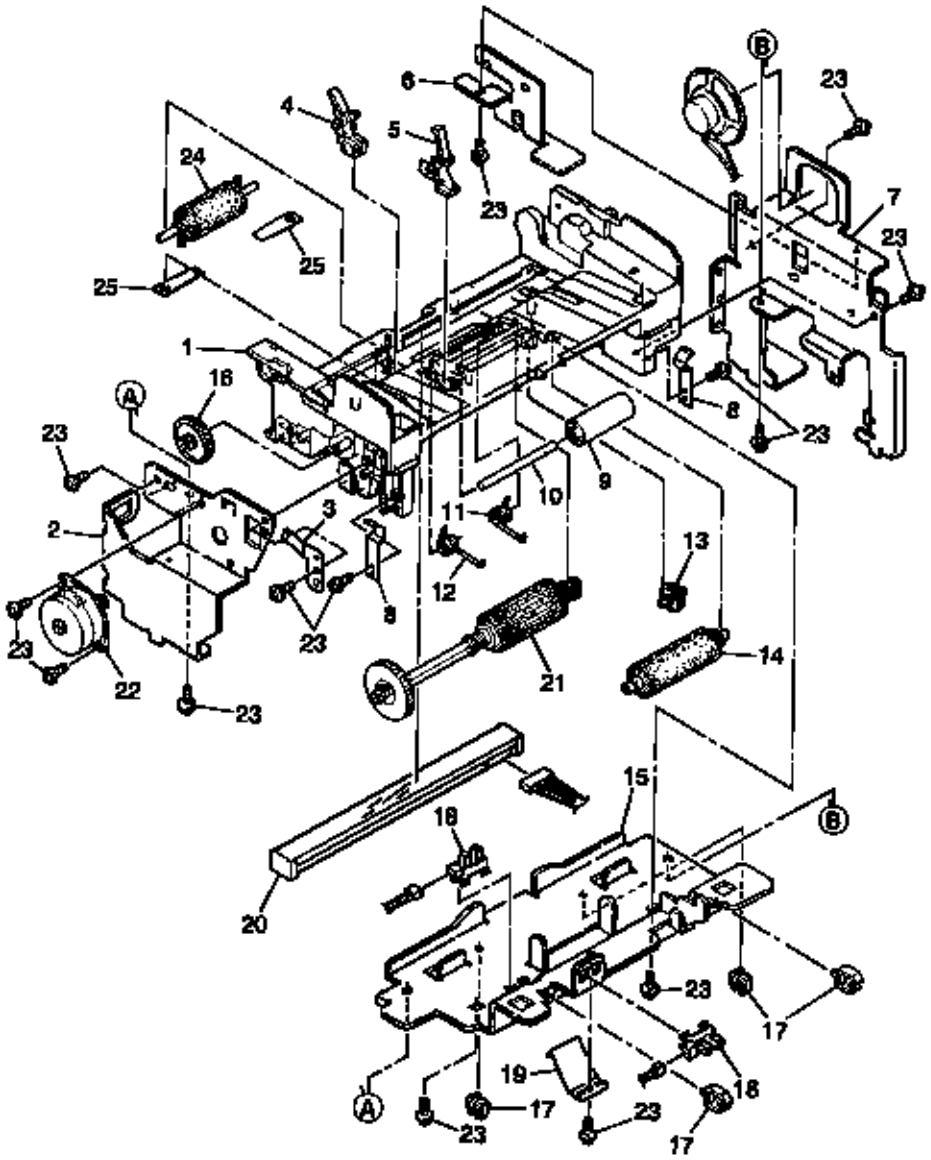

Rev.	No.	Oki parts Number	Description	Q'ty	Remarks
	1	1PP4120-1015P001	Frame: Scanner	1	53350701 RSPL
	2	2PP4120-1034P1	Base: Scanner (L)	1	50221101 RSPL
	3	4PP4120-1023P1	Plate: ADF Ground	1	51019901 RSPL
	4	4PP4120-1017P1	Lever: PC2	1	5080801 RSPL

	5	4PP4120-1016P1	Lever: PC1	1	50808701 RSPL
	6	3PP4120-1038P1	Pocket Plate	1	51020001 RSPL
	7	2PP4120-1037P1	Base: Scanner (R)	1	50221201 RSPL
	8	4PP4120-1032P1	Spring: Latch	2	50930101 RSPL
	9	4PP3529-5045P1	Roller: Pinch (Feed)	1	50405201 RSPL
	10	4PP4120-1020P1	Shaft: Pinch Roller	1	51113701 RSPL
	11	4PP4120-1022P1	Spring: Pinch R	1	50930301 RSPL
	12	4PP4120-1021P1	Spring: Pinch L	1	50930201 RSPL
	13	4PP3529-5033P1	Gear: ADF Idle	1	51229501 RSPL
	14	4PA3529-5082G1	Roller: Sub Assy.	1	50406101 RSPL
	15	2PP4120-1029P1	Plate: Scanner Bottom	1	51020101 RSPL
	16	4PP3529-5039P1	Gear: (Z81/15)	1	51236301 RSPL
	17	4PB3527-5803P1	Clamp: Mini	4	50708701 RSPL
	18	4YB4120-1137P1	Sensor: Photo	2	50410001 RSPL
	19	4PP4120-1030P1	Spring: Scanner	1	50930401 RSPL
	20b	40141401	Sensor: Contact Image Sensor-A4 (300 dpi)	1	40141401 RSPL
	21	3PA4120-1018G1	Roller: ADF Assy.	1	50410201 RSPL
	22	40047601	Motor: S (FX-VP)	1	40047601 RSPL
	23	N/A	Screw	1	N/A
	24	4PB4120-1024P001	Roller: Eject Pinch	1	50411501 RSPL
	25	4PP4120-1025P001	Spring: Eject Pinch	2	50932301 RSPL

Copyright 1997, Okidata, Division of OKI America, Inc. All rights reserved. See the OKIDATA Business Partner Exchange (BPX) for any updates to this material. (http://bpx.okidata.com)

OKIDATA

Service Manual for OF5300/5600

Chapter D Illustrated Parts List

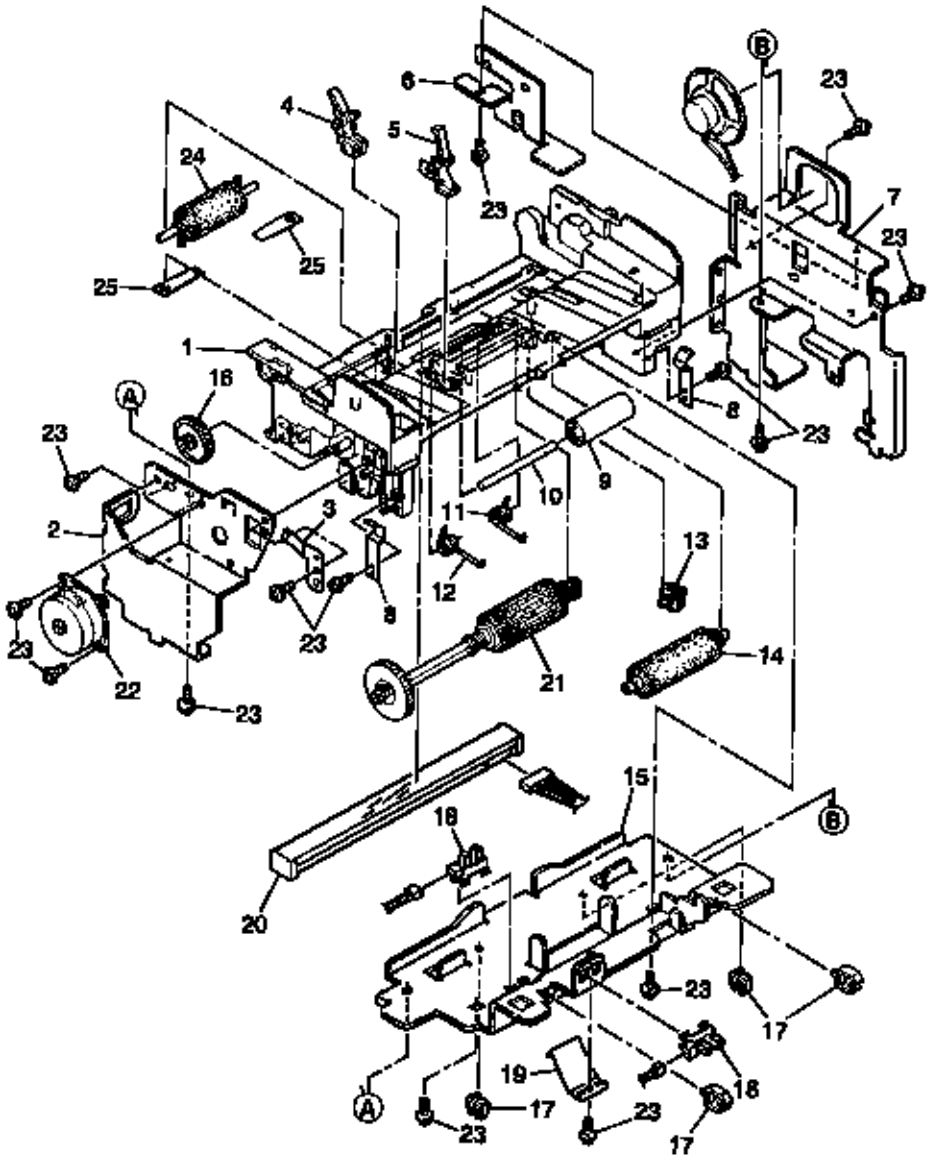

Rev.	No.	Oki parts Number	Description	Q'ty	Remarks
	1	3PA4120-1045G1	Roller: Feed (1) Assy.	1	53350701 RSPL
	2	4PP4120-1226P00 1	Plate: Earth (SR)	1	51023801 RSPL

	3	4PP4120-1227P001	Plate: Earth (SL)	1	51023901 RSPL
	4	4YS4011-1714P2	Earth Code	1	
	5	1PP4120-1040P001	Guide: Paper (U)	1	51024501 RSPL
	6	4PA4120-1041G1	Plate: Pinch Assy.	1	51020501 RSPL
	7	4PB4120-1051P1	Brush: Ground	1	51305101 RSPL
	8	4PP3529-5035P1	Gear: Z28	1	51236401 RSPL
	9	4PA3529-5087G1	Rubber: Separation Assy.	1	53344901 RSPL
	10	3PA4120-1049G1	Roller: Sensor Assy.	1	514510501 RSPL
	11	4PP3529-5034P1	Gear: Z22	1	51236501 RSPL
	12	3PA4120-1052G1	Roller: Exit Assy.	1	51410401 RSPL
	13	4PP3527-5153P1	Plate: Back-up ADF	1	53339801 RSPL
	14	4PP4120-1044P1	Spring: ADF	1	50930501 RSPL
	15	4PB4120-1051P2	Brush: Ground	2	51305102 RSPL
	16	4PP3522-3568P1	Bearing	2	51608901 RSPL
	17	N/A	Screw		N/A
	18	4YS4011-1714P3	Earth Cord	1	N/A
	19	4PP3527-5034P001	Gear (Z16)	2	Part of Item 1
	20	4PB4013-3501P003	Ring: CS4-SUS	2	50709103 RSPL

Copyright 1997, Okidata, Division of OKI America, Inc. All rights reserved. See the OKIDATA Business Partner Exchange (BPX) for any updates to this material. (http://bpx.okidata.com)

OKIDATA

Service Manual for OF5300/5600

Chapter D Illustrated Parts List

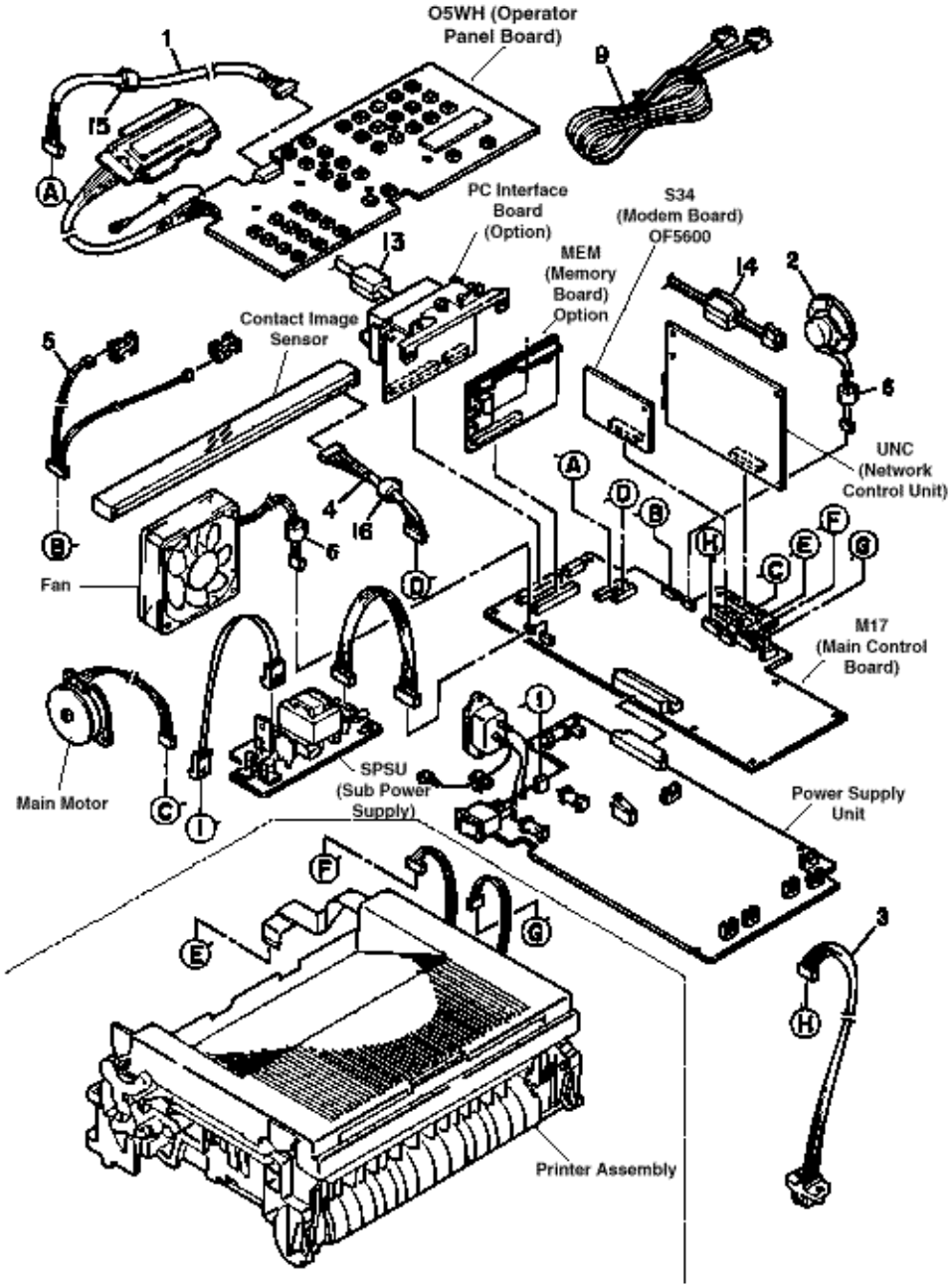

Rev.	No.	Oki parts Number	Description	Q'ty	Remarks
	1	40040002	Cord: Op Panel Connection	1	40041002 RSPL
	2	4YB4120-1026P1	Speaker	1	57001701 RSPL

	3	3YS4111-3527P2	Cable: 2nd Tray Connector	1	56632801 RSPL
	4	4YS4111-3441P1	Cord: Connector (C1S)	1	56634501 RSPL
	5	4YS4111-3442P1	Cord: Connector (PC1/2)	1	56634601 RSPL
	6	105A1070C0001	Core: Ferrite D	2	55505201 RSPL
	7b	4YS3512-1485P1	Cord: AC Power	1	56618901 RSPL
	7c	236A6058P0001	Cord: AC 220V	1	56631701 RSPL
	9a	236A3161P2	Cord: Modular Telephone	1	56621001 RSPL
	9b	4YB3522-1297G1	Core: Ferrite	1	56634801 RSPL
	10	105A1051C1003	Core: Ferrite	1	55505303 RSPL
	11	40048201	Connection Cord-Wire (PSU)	1	N/A
	12	40040101	Connection Cord-Wire (SPSU)	1	N/A
	13	105A1062C0002	0443-167251 Core	1	N/A
	14	105A1068C1004	5FC-8 Core	1	
	15	105A1070C0004	TFC-23-11-14 Core	1	
	16	105A1070C0003	Core: Ferrite	1	55505203 RSPL
		40050803	M17 (Main Control) Board		40050803 RSPL
		40035901	PWR Unit-ACDC Drop (120V) Power Supply Unit		40035901 RSPL
		40035902	PWR Unit-ACDC Drop (230V) Power Supply Unit		40035902 RSPL
		40105301	05WH (Operator Panel) Board (OF5300)		40105301 RSPL
		40079201	Unit: Op Panel (OF5600)		40079101 RSPL
		40044501	UNC (Network Control Unit) Board		40044501 RSPL
		40044502	UNC (Network Control Unit) Board		40044502 RSPL
		4YB4049-1878P001	SPSU (Sub Power Supply) Board		N/A
			MEM (Memory) Board (Option) 1 MB		70031501 Option
			MEM (Memory) Board (Option) 2 MB (OF5600)		70031601 Option
			PC Interface Board (Option)		58241701 Option
			S34 (Modem) Board (OKIFAX 5600)		40274601

Notes:

Item 7 is not shown.

The SPSU (Sub Power Supply) Board will be removed from future revisions of the product.

Copyright 1997, Okidata, Division of OKI America, Inc. All rights reserved. See the OKIDATA Business Partner Exchange (BPX) for any updates to this material. (http://bpx.okidata.com)

OKIDATA

Service Manual for OF5300/5600

Chapter D Illustrated Parts List

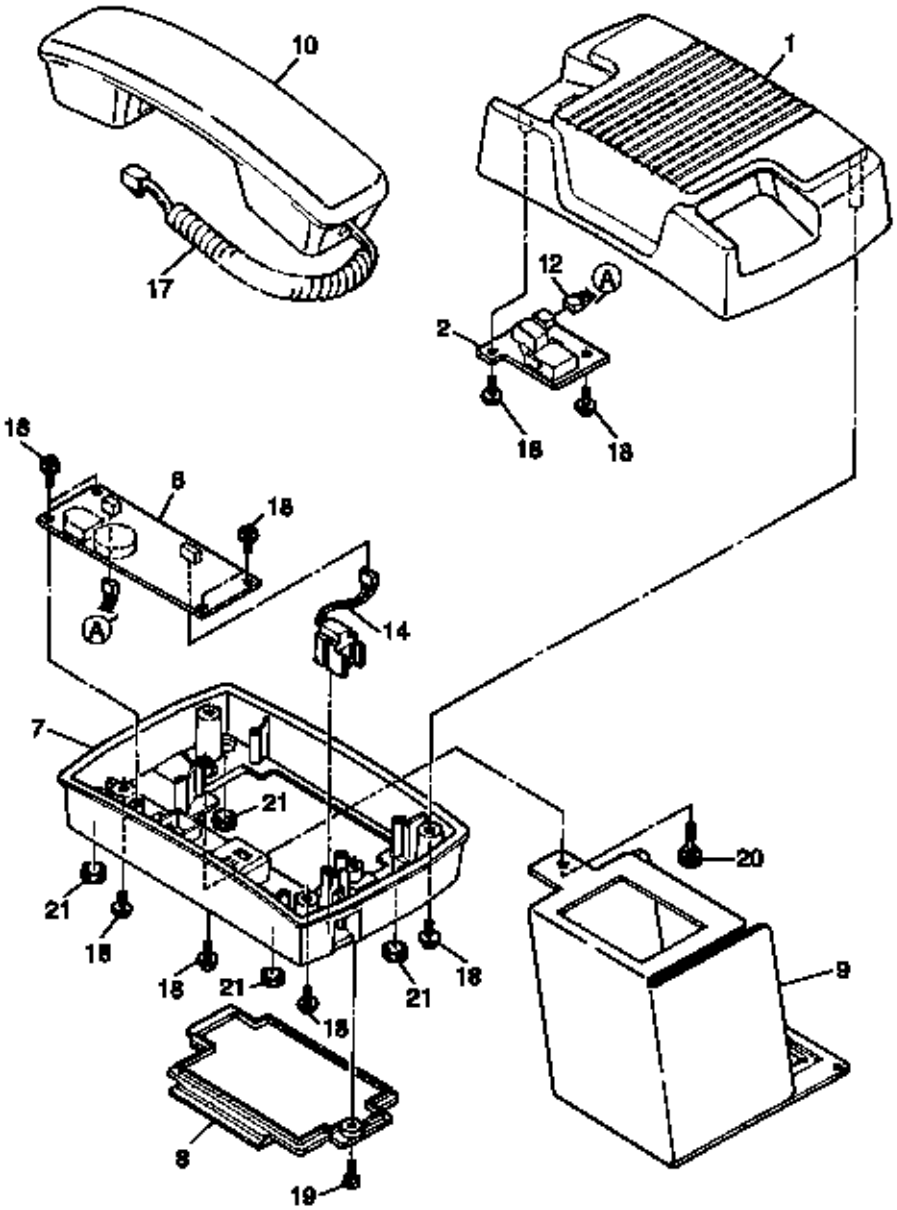

Rev.	No.	Oki parts Number	Description	Q'ty	Remarks
	1	1PP4120-1095P01 1	Cradle	1	N/A

	2	4YA4129-1006G001	Board-Hook	1	N/A
	6	4YA4129-1005G001	Board-TELU	1	N/A
	7	1PP4120-1096P001	Base-Cradle	1	N/A
	8	3PP4120-1097P001	Cover-Terminal	1	N/A
	9	3PA4120-1140G001	Attachment-Assembly	1	N/A
	10	4YB3512-2029G004	Handset	1	N/A
	12	4YS4111-5552P001	Connection-Cord	1	N/A
	14	4YS4111-5551P001	Moduler-Jack Cord	1	N/A
	17	4YS3522-1252G002	Cord-Handset	1	56628101 RSPL
	18	N/A	Tapping-Screw	1	N/A
	19	N/A	Screw	1	N/A
	20	4PB4120-1136P001	Knob-Screw	1	N/A
	21	4PB4016-1960P001	Rubber-Foot	4	N/A

Copyright 1997, Okidata, Division of OKI America, Inc. All rights reserved. See the OKIDATA Business Partner Exchange (BPX) for any updates to this material. (http://bpx.okidata.com)

OKIDATA

Service Manual for OF5300/5600

Chapter D Illustrated Parts List

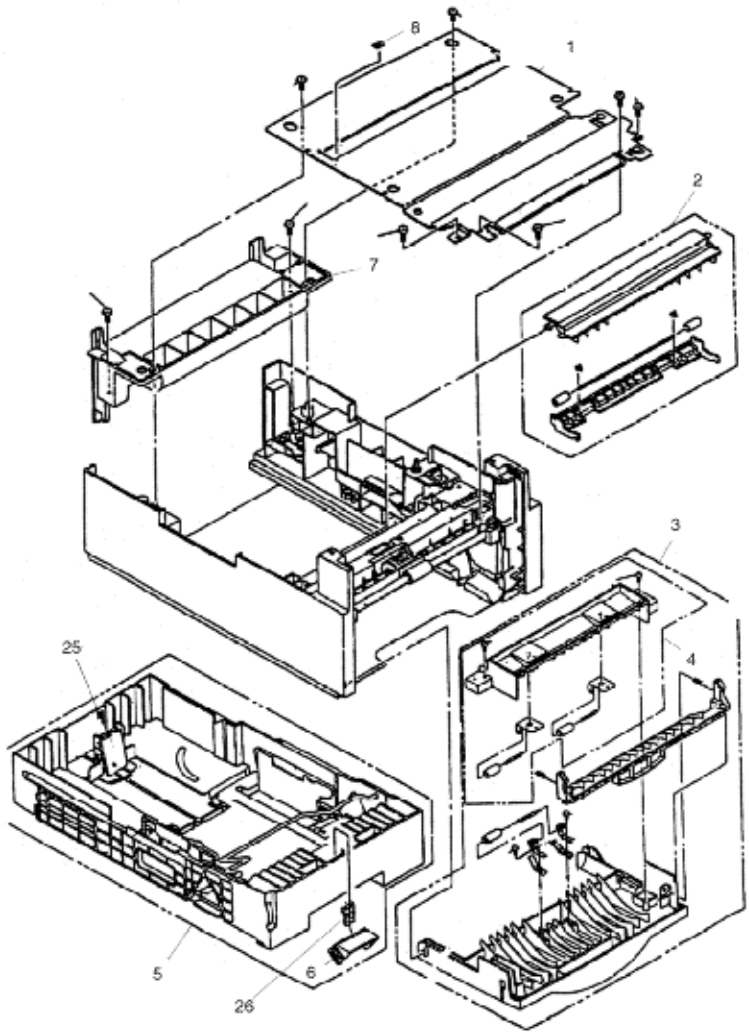

Rev.	No.	Oki parts Number	Description	Q'ty	Remarks
	1	1PP4122-1401P001	Plate: Upper	1	51023301
	2	3PA4122-1370G001	Guide: Sheet Assembly	1	50222001
	3	1PA4122-1369G001	Cover: Front Assembly	1	53075301
	4	3PA4122-1371G001	Guide: Inner Assembly	1	50221501
	5	1PA4122-1362G004	Cassette Assembly (2nd Tray)	1	50107304

	6	4PP4120-1009G001	Frame: Separation (F) Assembly	1	50222101
	7	1PP4122-1323P001	Cover: Rear	1	53075201
	8	4PB4122-1441P001	Ground: Stick Finger	1	51023401
	9	1PA4122-1366G001	Frame: Hopping Assembly	1	50222401
	10	4PP3522-3568P001	Bearing	1	51608901
	11	4PP4122-1207P001	Gear (Z70)	1	51239001
	12	3PP4122-1331P001	Sensor: Lever (P)	1	50414201
	13	3PA4122-1393G001	Roller: Feed Assembly	1	50222501
	14	3YS4111-3528P001	Cable & Connector	1	56633901
	15	3PB4122-1399P001	Motor: Pulse	1	56512201
	16	4PP4122-1384G001	Bracket	1	51712001
	17	4PP4122-1383P001	Gear (Z24)	2	51238901
	18	4PP4122-1226P001	Gear (Z87/Z60)	1	51239101
	19	4PP4122-1389P001	Plate: Bottom	1	51023201
	20	4PP4122-1365G001	Guide: 2nd Cassette (L) Assembly	1	50222301
	21	3PA4122-1367G001	Roller: Hopping Assy 2nd Tray	1	50409501
	22	1YX4122-1364G002	Guide: 2nd Cassette (R) Assembly	1	50222201
	23	4PB4122-1382P001	Clutch: One-way 2nd Tray	1	51401101
	24	4YA4046-1651G002	TQSB-2 PCB	1	55078102
	25	3PA4122-1372G001	Tail Guide Assembly	1	
	26	4PP4122-1238P002	Spring: Separation	1	50927502
	27	4PP4122-1184P001	Cassette Lock Lever	1	RSPL
	28	4PP4122-1347P001	Locks Spring	1	
	29	4PP4122-1217P001	Pull Block	1	
	30	4PP4122-1398P002	Sheet Spring	1	
	31	4PP4122-1339G001	Sheet Link (L)	1	

	32	4PP4122-1338G001	Sheet Link (R)	1	

Copyright 1997, Okidata, Division of OKI America, Inc. All rights reserved. See the OKIDATA Business Partner Exchange (BPX) for any updates to this material. (http://bpx.okidata.com)

OKIDATA

Service Manual for OF5300/5600

Chapter D Illustrated Parts List

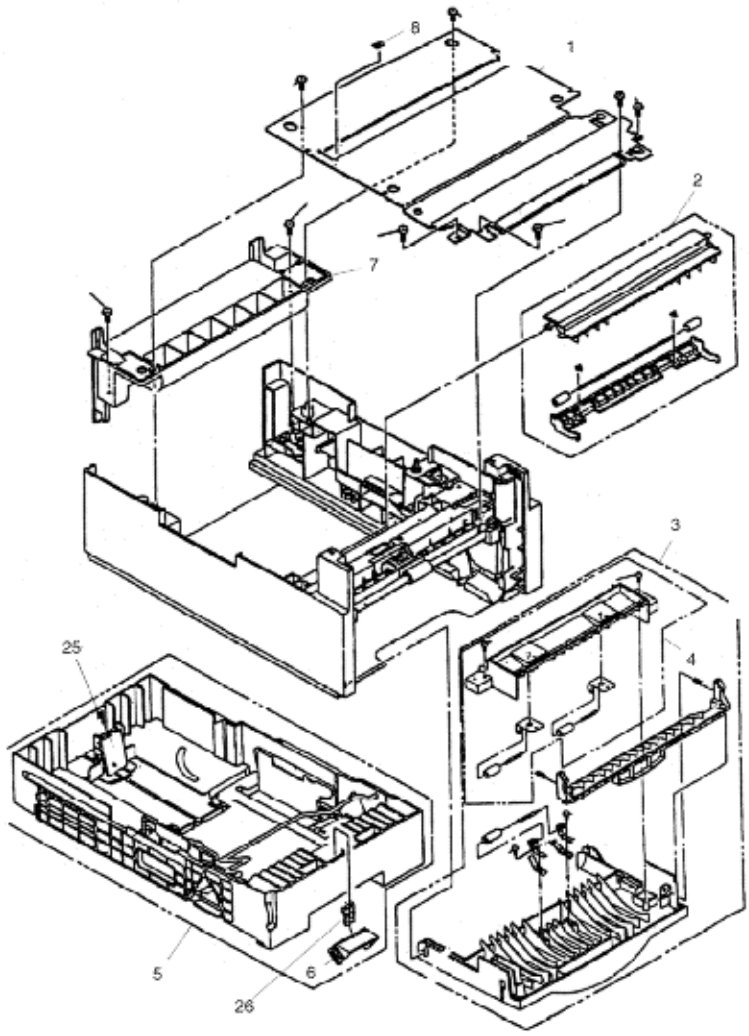

Rev.	No.	Oki parts Number	Description	Q'ty	Remarks
	1	1PP4122-1401P001	Plate: Upper	1	51023301
	2	3PA4122-1370G001	Guide: Sheet Assembly	1	50222001
	3	1PA4122-1369G001	Cover: Front Assembly	1	53075301
	4	3PA4122-1371G001	Guide: Inner Assembly	1	50221501

	5	1PA4122-1362G004	Cassette Assembly (2nd Tray)	1	50107304
	6	4PP4120-1009G001	Frame: Separation (F) Assembly	1	50222101
	7	1PP4122-1323P001	Cover: Rear	1	53075201
	8	4PB4122-1441P001	Ground: Stick Finger	1	51023401
	9	1PA4122-1366G001	Frame: Hopping Assembly	1	50222401
	10	4PP3522-3568P001	Bearing	1	51608901
	11	4PP4122-1207P001	Gear (Z70)	1	51239001
	12	3PP4122-1331P001	Sensor: Lever (P)	1	50414201
	13	3PA4122-1393G001	Roller: Feed Assembly	1	50222501
	14	3YS4111-3528P001	Cable & Connector	1	56633901
	15	3PB4122-1399P001	Motor: Pulse	1	56512201
	16	4PP4122-1384G001	Bracket	1	51712001
	17	4PP4122-1383P001	Gear (Z24)	2	51238901
	18	4PP4122-1226P001	Gear (Z87/Z60)	1	51239101
	19	4PP4122-1389P001	Plate: Bottom	1	51023201
	20	4PP4122-1365G001	Guide: 2nd Cassette (L) Assembly	1	50222301
	21	3PA4122-1367G001	Roller: Hopping Assy 2nd Tray	1	50409501
	22	1YX4122-1364G002	Guide: 2nd Cassette (R) Assembly	1	50222201
	23	4PB4122-1382P001	Clutch: One-way 2nd Tray	1	51401101
	24	4YA4046-1651G002	TQSB-2 PCB	1	55078102
	25	3PA4122-1372G001	Tail Guide Assembly	1	
	26	4PP4122-1238P002	Spring: Separation	1	50927502
	27	4PP4122-1184P001	Cassette Lock Lever	1	RSPL
	28	4PP4122-1347P001	Locks Spring	1	
	29	4PP4122-1217P001	Pull Block	1	
	30	4PP4122-1398P002	Sheet Spring	1	

	31	4PP4122-1339G001	Sheet Link (L)	1	
	32	4PP4122-1338G001	Sheet Link (R)	1	

Copyright 1997, Okidata, Division of OKI America, Inc. All rights reserved. See the OKIDATA Business Partner Exchange (BPX) for any updates to this material. (http://bpx.okidata.com)

OKIDATA

Service Manual for OF5300/5600

Chapter D Illustrated Parts List

Whole Unit

Consumables

Options

Packaging

User's Manuals

Service (Technical) Manuals

Copyright 1997, Okidata, Division of OKI America, Inc. All rights reserved. See the OKIDATA Business Partner Exchange (BPX) for any updates to this material. (http://bpx.okidata.com)

Service Manual for OF5300/5600

Chapter D Illustrated Parts List

OKIFAX 5300	P/N 62209201
OKIFAX 5600	P/N 62209301

Copyright 1997, Okidata, Division of OKI America, Inc. All rights reserved. See the OKIDATA Business Partner Exchange (BPX) for any updates to this material. (http://bpx.okidata.com)

Service Manual for OF5300/5600

Chapter D Illustrated Parts List

Kit: Image Drum	P/N 56116901
Cartridge: Toner	P/N 52106701

Copyright 1997, Okidata, Division of OKI America, Inc. All rights reserved. See the OKIDATA Business Partner Exchange (BPX) for any updates to this material. (http://bpx.okidata.com)

1 MB Fax Memory Expansion Card	P/N 70013501
2 MB Fax Memory Expansion Card	P/N 70031601 OKIFAX 5600 ONLY
500 Sheet Letter/Legal Paper Tray	P/N 70029401
Printer Interface	P/N 58241701
Telephone Handset	P/N 70031801

Copyright 1997, Okidata, Division of OKI America, Inc. All rights reserved. See the OKIDATA Business Partner Exchange (BPX) for any updates to this material. (http://bpx.okidata.com)

Box: Spares Kraft	P/N 53552209
Cap: End - Left	P/N 53591101
Cap: End - Right	P/N 53591102

Copyright 1997, Okidata, Division of OKI America, Inc. All rights reserved. See the OKIDATA Business Partner Exchange (BPX) for any updates to this material. (http://bpx.okidata.com)

Service Manual for OF5300/5600

Chapter D Illustrated Parts List

Guide: Quick Start Guide (English Only)	P/N 59279001
Handbook: Hardware	P/N 59279501
Kit: PC Interface	P/N 58327601

Copyright 1997, Okidata, Division of OKI America, Inc. All rights reserved. See the OKIDATA Business Partner Exchange (BPX) for any updates to this material. (http://bpx.okidata.com)

Kit: OKIFAX 5300/5600 Service Training	P/N 58241901
Includes the items listed below:	
Sheet: ID/Read Me First	P/N 58327301
Manual: Certification	P/N 59278401
Manual: Service	P/N 59278301
Guide: Quick Start Guide (English Only)	P/N 59279001
Handbook: Hardware	P/N 59279501
Kit: PC Interface	P/N 58327601

Copyright 1997, Okidata, Division of OKI America, Inc. All rights reserved. See the OKIDATA Business Partner Exchange (BPX) for any updates to this material. (http://bpx.okidata.com)

The boards used in the OKIFAX 5300 and OKIFAX 5600 are listed below.

- M17 (Main Control) Board
- UNC-5 (Network Control Unit)
- Power Supply Unit
- O5WH (Operator Panel) Board
- S34 (Modem) Board MODEM (OKIFAX 5600 Only)
- CTR (PC Interface) Board Option
- MEM (Memory) Board Option
- TEL (Telephone Interface) Board Option
- HOOK (Hook) Board Option
- TQXB (Second Tray) Option

For more information, please refer to Appendix A, Board Descriptions.

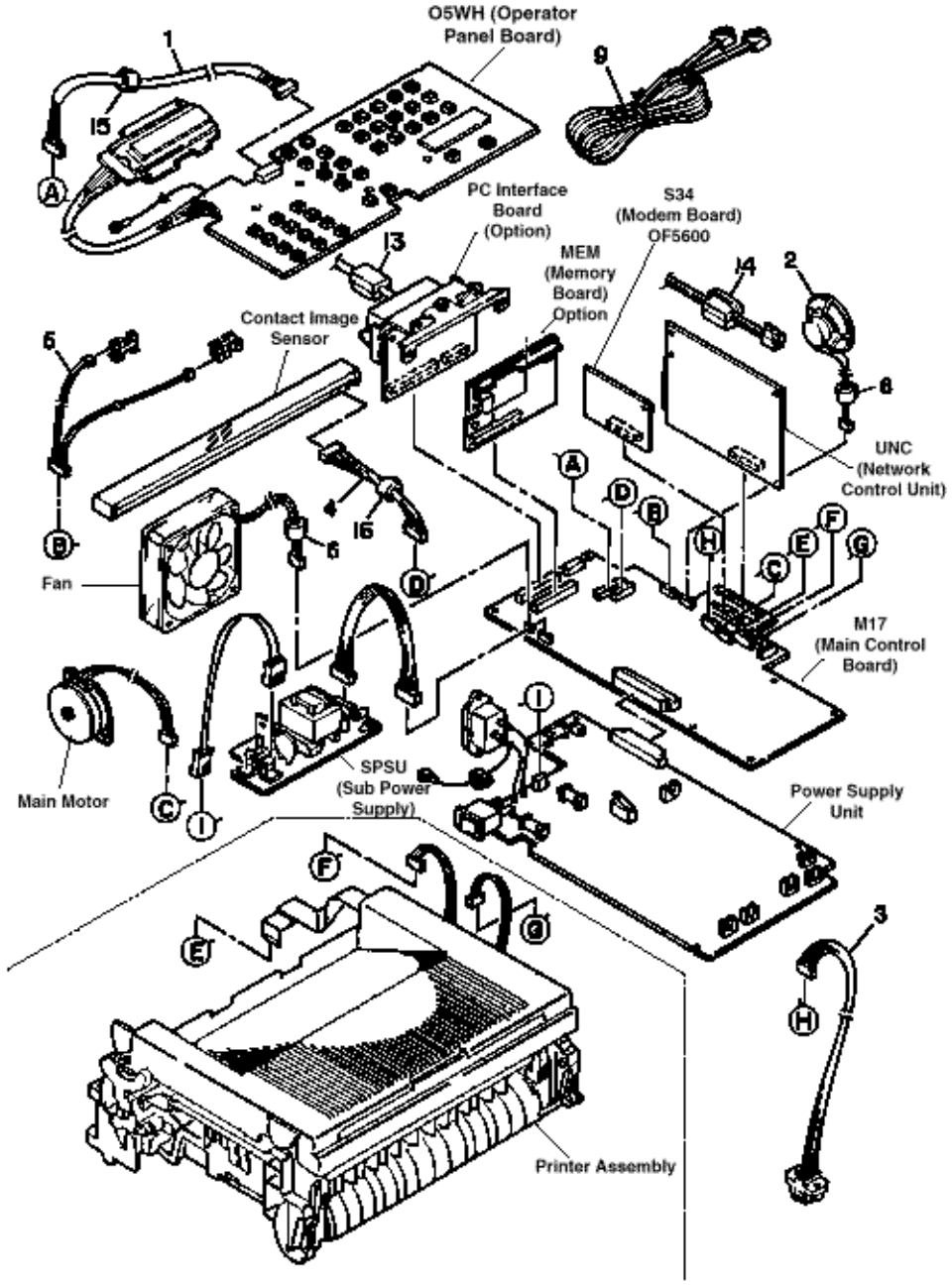

Rev.	No.	Oki parts Number	Description	Q'ty	Remarks
	1	40040002	Cord: Op Panel Connection	1	40041002 RSPL
	2	4YB4120-1026P1	Speaker	1	57001701 RSPL
	3	3YS4111-3527P2	Cable: 2nd Tray Connector	1	56632801 RSPL
	4	4YS4111-3441P1	Cord: Connector (C1S)	1	56634501 RSPL
	5	4YS4111-3442P1	Cord: Connector (PC1/2)	1	56634601 RSPL
	6	105A1070C0001	Core: Ferrite D	2	55505201 RSPL
	7b	4YS3512-1485P1	Cord: AC Power	1	56618901 RSPL
	7c	236A6058P0001	Cord: AC 220V	1	56631701 RSPL
	9a	236A3161P2	Cord: Modular Telephone	1	56621001 RSPL

	9b	4YB3522-1297G1	Core: Ferrite	1	56634801 RSPL
	10	105A1051C1003	Core: Ferrite	1	55505303 RSPL
	11	40048201	Connection Cord-Wire (PSU)	1	N/A
	12	40040101	Connection Cord-Wire (SPSU)	1	N/A
	13	105A1062C0002	0443-167251 Core	1	N/A
	14	105A1068C1004	5FC-8 Core	1	
	15	105A1070C0004	TFC-23-11-14 Core	1	
	16	105A1070C0003	Core: Ferrite	1	55505203 RSPL
		40050803	M17 (Main Control) Board		40050803 RSPL
		40035901	PWR Unit-ACDC Drop (120V) Power Supply Unit		40035901 RSPL
		40035902	PWR Unit-ACDC Drop (230V) Power Supply Unit		40035902 RSPL
		40105301	05WH (Operator Panel) Board (OF5300)		40105301 RSPL
		40079201	Unit: Op Panel (OF5600)		40079101 RSPL
		40044501	UNC (Network Control Unit) Board		40044501 RSPL
		40044502	UNC (Network Control Unit) Board		40044502 RSPL
		4YB4049-1878P001	SPSU (Sub Power Supply) Board		N/A
			MEM (Memory) Board (Option) 1 MB		70031501 Option
			MEM (Memory) Board (Option) 2 MB (OF5600)		70031601 Option
			PC Interface Board (Option)		58241701 Option
			S34 (Modem) Board (OKIFAX 5600)		40274601

Notes:

Item 7 is not shown.

The SPSU (Sub Power Supply) Board will be removed from future revisions of the product.

Copyright 1997, Okidata, Division of OKI America, Inc. All rights reserved. See the OKIDATA Business Partner Exchange (BPX) for any updates to this material. (http://bpx.okidata.com)

Service Manual for OF5300/5600

Chapter F Second Paper Feeder

1.1 Functions

1.2 External View and Component Names (Figure 1-1)

Copyright 1997, Okidata, Division of OKI America, Inc. All rights reserved. See the OKIDATA Business Partner Exchange (BPX) for any updates to this material. (http://bpx.okidata.com)

When the Second Paper Feeder is installed, the Second Paper Feeder is connected to the facsimile by a connector. The Second Paper Feeder supplies paper automatically through the operation of pulse motor (hopping), which is driven by signals sent from CPU of the Second Paper Feeder under the control of the facsimile.

The main functions are listed below.

Paper that can be used:

Paper Type

- Standard paper: Xerox 4200 (20-lb)
- Special paper: PPC sheets; use of envelopes or thick paper is not possible
- Cut sheet size: A4, Letter, Legal13, Legal14
- Special size: Paper width: 210 to 216 mm (82.7 to 8.5 inches)
  Paper length: 279.4 to 355.6 mm (11 to 14 inches)

Weight

- 16-lb to 24-lb (60 to 90 g/m^2)
- Paper setting quantity: 500 sheets of paper weighing 17.07 lb. (64 g/m^2)

Copyright 1997, Okidata, Division of OKI America, Inc. All rights reserved. See the OKIDATA Business Partner Exchange (BPX) for any updates to this material. (http://bpx.okidata.com)

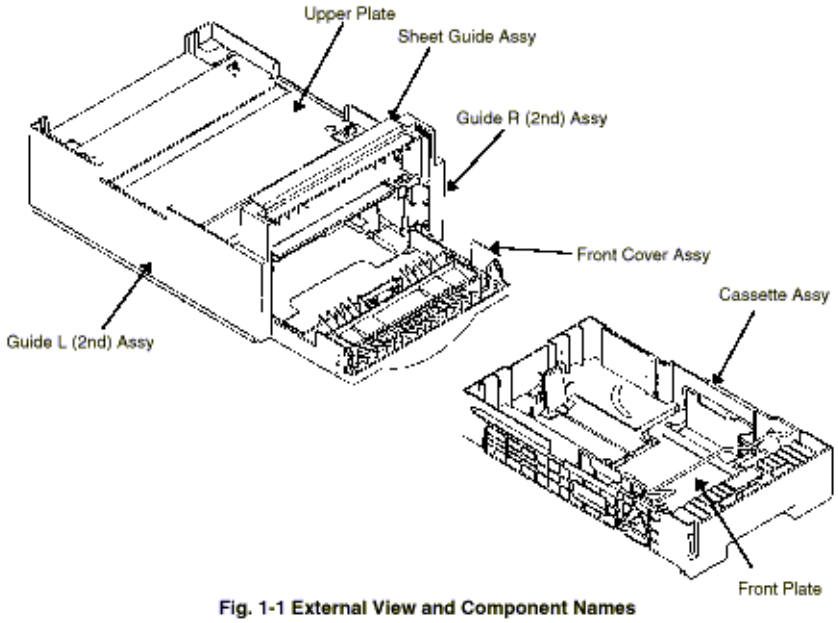

Fig. 1-1 External View and Component Names

Copyright 1997, Okidata, Division of OKI America, Inc. All rights reserved. See the OKIDATA Business Partner Exchange (BPX) for any updates to this material. (http://bpx.okidata.com)

Service Manual for OF5300/5600

Chapter F Second Paper Feeder

2.1 General Mechanism

2.2 Hopper Mechanism

Copyright 1997, Okidata, Division of OKI America, Inc. All rights reserved. See the OKIDATA Business Partner Exchange (BPX) for any updates to this material. (http://bpx.okidata.com)

The Second Paper Feeder feeds the paper into the facsimile by receiving the signal from the facsimile, which drives the pulse motor inside the Second Paper Feeder, and this motion is transmitted to rotate the one-way clutch of the hopping frame assembly. The paper is delivered from the hopper into the facsimile through the turning of the hopping roller and feed roller.

Once delivered into the facsimile, the paper is then controlled and fed through by pulse motor (registration) of the facsimile.

Copyright 1997, Okidata, Division of OKI America, Inc. All rights reserved. See the OKIDATA Business Partner Exchange (BPX) for any updates to this material. (http://bpx.okidata.com)

The hopper automatically feeds the facsimile with the paper being set, single sheet at a time. When the paper is loaded in the paper cassette, it is then transported by the pulse motor, carrying forward only a single sheet caught by the separation rubber at a time.

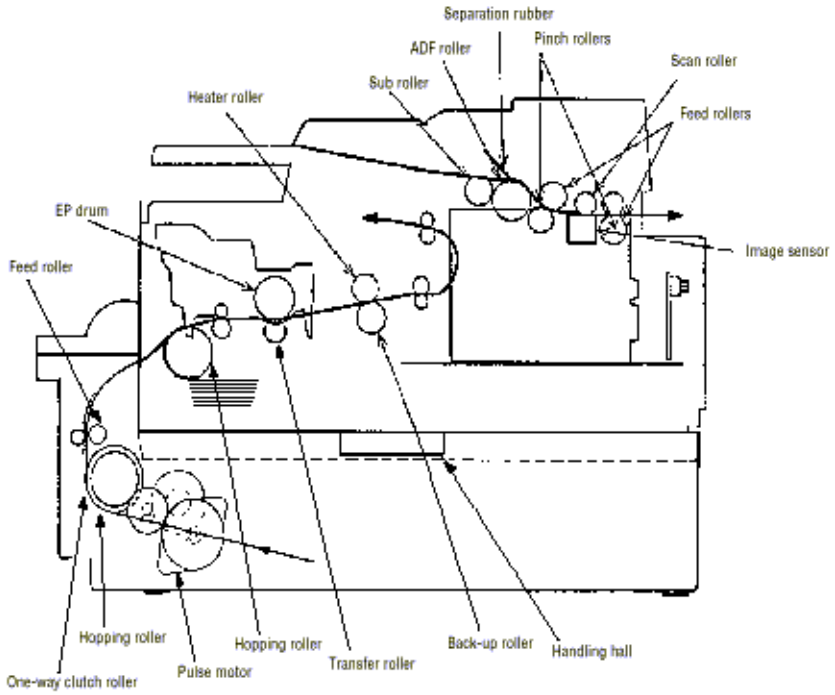

Copyright 1997, Okidata, Division of OKI America, Inc. All rights reserved. See the OKIDATA Business Partner Exchange (BPX) for any updates to this material. (http://bpx.okidata.com)

Service Manual for OF5300/5600

Chapter F Second Paper Feeder

This section covers the procedures for the disassembly, reassembly and installations in the field. This section describes the disassembly procedures, and for reassembly procedures, basically proceed with the disassembly procedures in the reverse order.

Copyright 1997, Okidata, Division of OKI America, Inc. All rights reserved. See the OKIDATA Business Partner Exchange (BPX) for any updates to this material. (http://bpx.okidata.com)

(1) Parts replacements must be carried out, by first turning the facsimile power switch off "O" and removing the facsimile from the Second Paper Feeder.

(2) Do not disassemble the Second Paper Feeder if it is operating normally.

(3) Establish the extent of disassembly suitable for the purpose of the procedure, and do not disassemble any more than necessary.

(4) Only specified service tools may be used.

(5) Disassembly must be carried out according to the prescribed procedures. Parts may be damaged if such procedures are not followed.

(6) Small parts such as screws and collars can easily be lost, therefore these parts should be temporarily fixed in the original location.

(7) When handling printed circuit boards, do not use any glove which may generate static electricity.

(8) Do not place the printed circuit boards directly on the equipment or floor.

Service Tools

Table 3-1 shows the tools required for the replacement of printed circuit boards, assemblies and units in the field.

Service Tools (Table 3-1)

No.	Service Tools		Q'ty	Application	Remarks
1	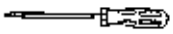	No. 1-100 Phillips screwdriver	1	2 ~ 2.5 mm screws	
2		No. 2-100 Phillips screwdriver	1	3 ~ 5 mm screws	
3		No. 3-100 screwdriver	1		
4		Digital multimeter	1		
5		Pliers	1		

Copyright 1997, Okidata, Division of OKI America, Inc. All rights reserved. See the OKIDATA Business Partner Exchange (BPX) for any updates to this material. (http://bpx.okidata.com)

This section describes the layout of the main components.

Main Components Layout Diagram (Figure 3-1)

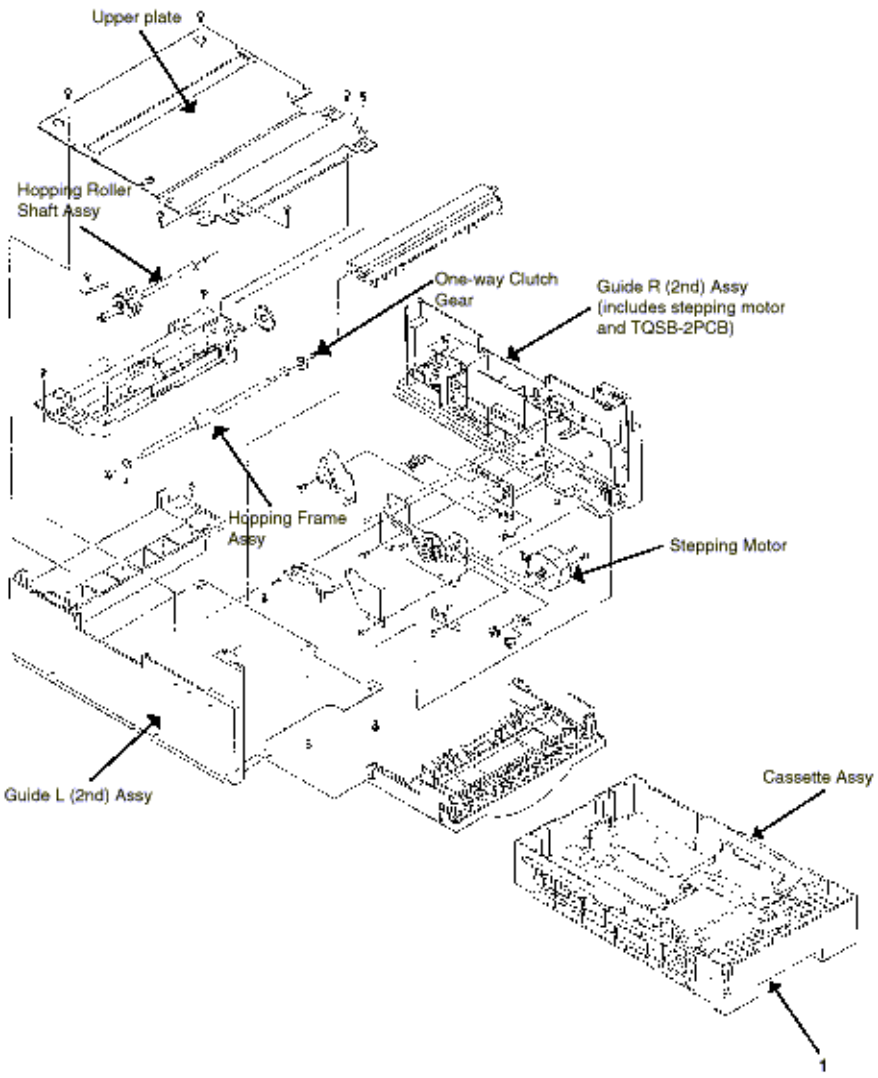

Copyright 1997, Okidata, Division of OKI America, Inc. All rights reserved. See the OKIDATA Business Partner Exchange (BPX) for any updates to this material. (http://bpx.okidata.com)

This section describes the parts replacement methods for the components listed in the disassembly order diagram below.

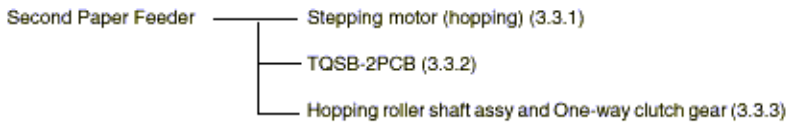

Copyright 1997, Okidata, Division of OKI America, Inc. All rights reserved. See the OKIDATA Business Partner Exchange (BPX) for any updates to this material. (http://bpx.okidata.com)

(1) Turn the facsimile power switch off, pull out the AC cord from the outlet. Remove the facsimile from the Second Paper Feeder.

(2) Take the paper cassette assy 1 out of Second Paper Feeder.

(3) Remove six screws 2 and remove the upper plate 3. Remove two screws 5 and remove the hopping frame assy 6.

(4) Remove the front cover assy 4 off the guide boss on the guide L (2nd) assy 7 by bending the guide L (2nd) assy 7 in the direction of the arrow shown in the magnified view below.

(5) Pull the sheet guide assy 8 in the direction of arrow A and also push in the direction of arrow B to unlock the notch, and bring the sheet guide assy 8 in the direction of arrow B to remove the sheet guide assy 8.

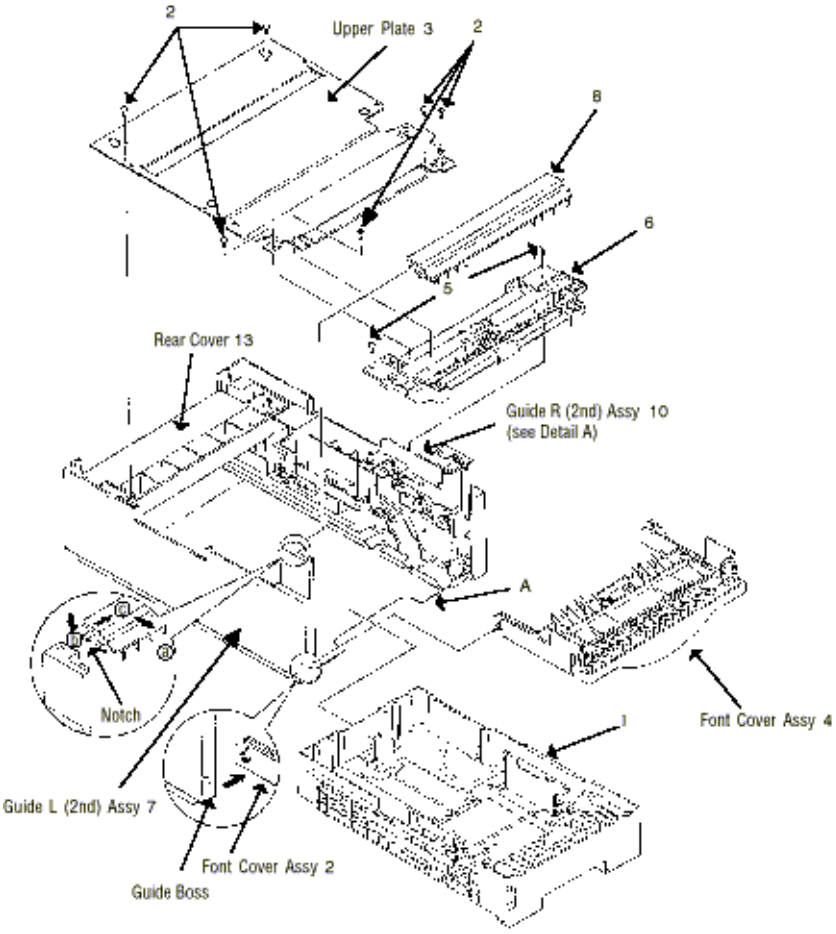

(6) Remove three screws 9 which are holding the guide R (2nd) assy 10 to the bottom plate 11. Remove the screw 12 which is keeping the rear cover 13 and guide R (2nd) assy 10. Remove the guide R (2nd)

assy 10.

(7) Remove the protect (M) 14, guide bracket 15, planet gears 16 and planet gear bracket 17.

(8) Remove the E-ring 18 which is keeping the sheet link 19 on the guide R (2nd) assy 10, and pull out the hinge stand 20.

(9) Remove three remaining screws 21 which are keeping the motor on the motor bracket 22, and remove the connector off the Stepping Motor 23.

(10) Remove two screws 24 on the Stepping Motor 23.

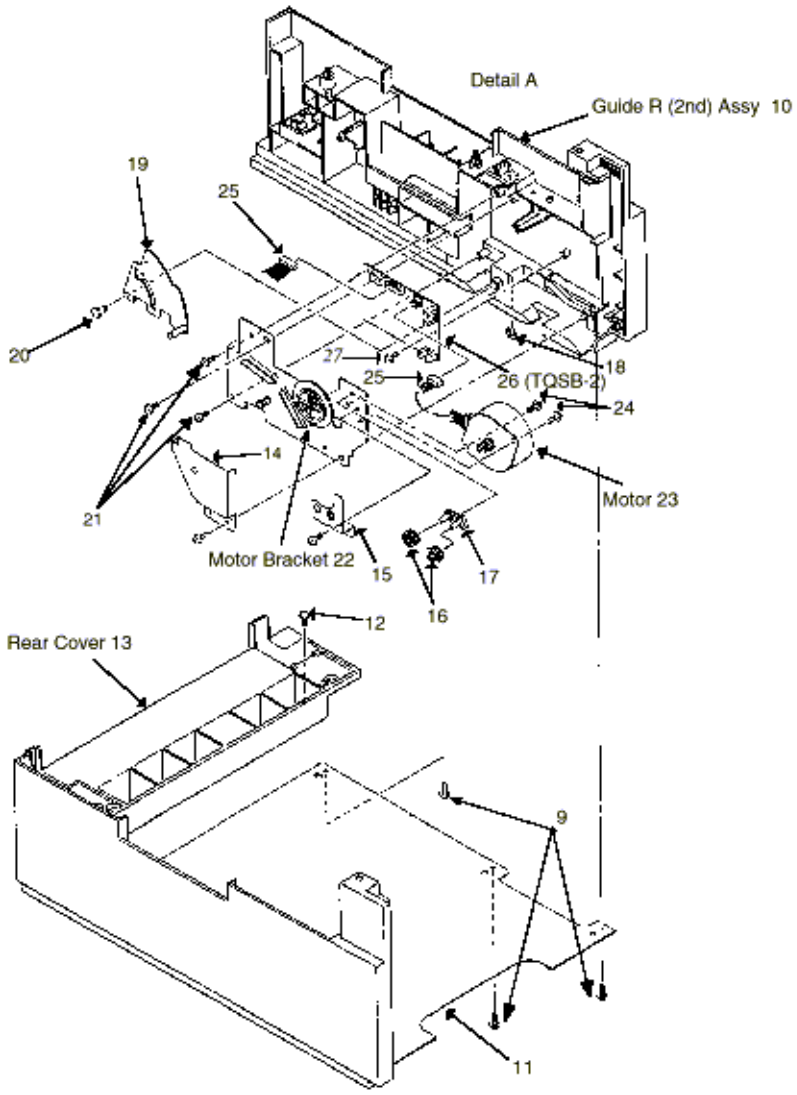

Copyright 1997, Okidata, Division of OKI America, Inc. All rights reserved. See the OKIDATA Business Partner Exchange (BPX) for any updates to this material. (http://bpx.okidata.com)

(1) Remove the pulse motor (see 3.3.1).

(2) Remove the connector 25 from the TQSB-2PCB 26.

(3) Remove the screw 27 and remove the TQSB-2PCB 26.

Note: Refer to Detail A in previous section (see 3.3.1).

Copyright 1997, Okidata, Division of OKI America, Inc. All rights reserved. See the OKIDATA Business Partner Exchange (BPX) for any updates to this material. (http://bpx.okidata.com)

(1) Follow up to step (3) of 3.3.1 and remove the hopping frame assy.

(2) Remove the screw 1 and remove the earth plate 2. Remove the sensor lever 7 and remove the ground plate 6. Remove the gear 3 and remove the metal bush 5 and Hopping Roller shaft Assy 4.

(3) Remove the E-ring 11 and remove the one-way clutch gear 12 on the right side of the feed roller 10.

Note: The metal bush 13 also comes off. Be careful not to lose it.

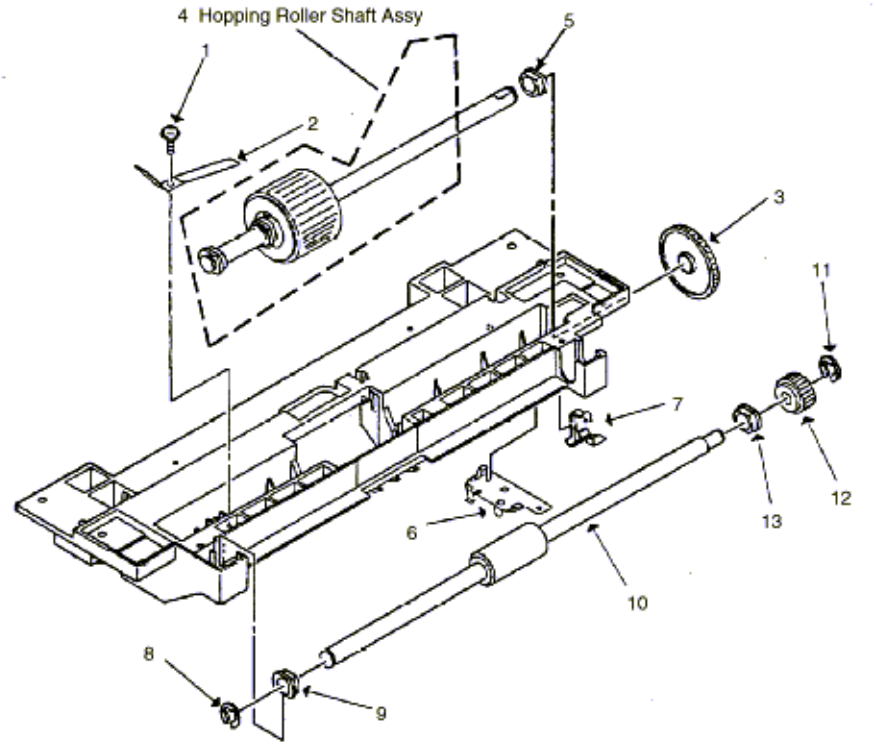

Copyright 1997, Okidata, Division of OKI America, Inc. All rights reserved. See the OKIDATA Business Partner Exchange (BPX) for any updates to this material. (http://bpx.okidata.com)

Service Manual for OF5300/5600

Chapter F Second Paper Feeder

4.1 Precautions Prior to the Troubleshooting

4.2 Preparations for the Troubleshooting

4.3 Troubleshooting Method

4.3.1 LCD Status Message List

Copyright 1997, Okidata, Division of OKI America, Inc. All rights reserved. See the OKIDATA Business Partner Exchange (BPX) for any updates to this material. (http://bpx.okidata.com)

(1) Go through the basic checking items provided in the facsimile Handbook.

(2) Obtain detailed information concerning the problem from the user.

(3) Go through checking in the conditions similar to that in which the problem occurred.

Copyright 1997, Okidata, Division of OKI America, Inc. All rights reserved. See the OKIDATA Business Partner Exchange (BPX) for any updates to this material. (http://bpx.okidata.com)

(1) Display on the Operator panel

The status of the problem is displayed on the LCD (Liquid Crystal Display) on the Operator panel. Go through the appropriate troubleshooting procedures according to the messages displayed on the LCD.

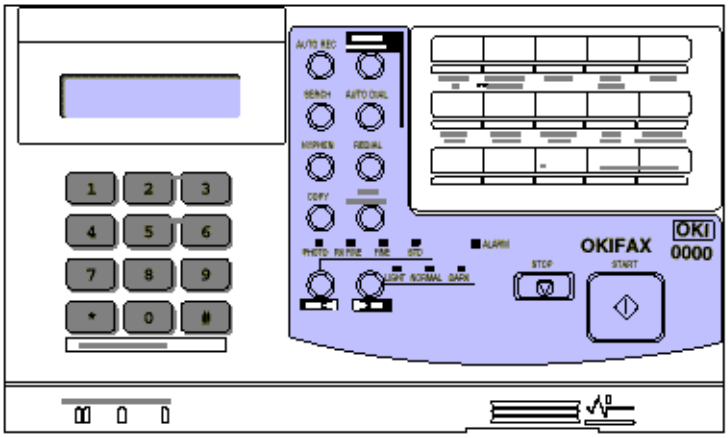

Control Panel of OKIFAX 5300

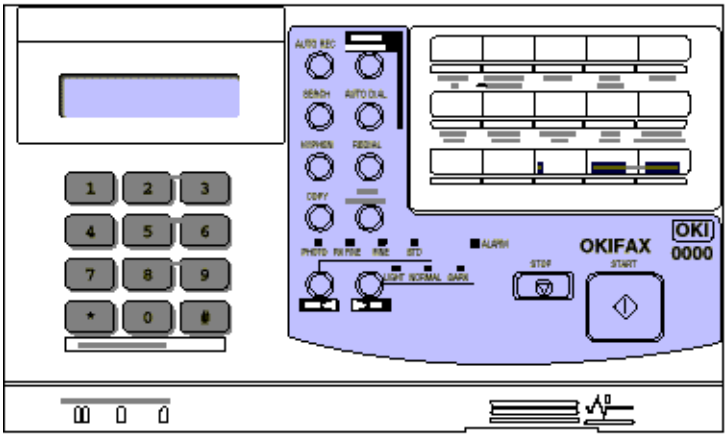

Copyright 1997, Okidata, Division of OKI America, Inc. All rights reserved. See the OKIDATA Business Partner Exchange (BPX) for any updates to this material. (http://bpx.okidata.com)

When a problem occurs, go through the troubleshooting according to the following procedure.

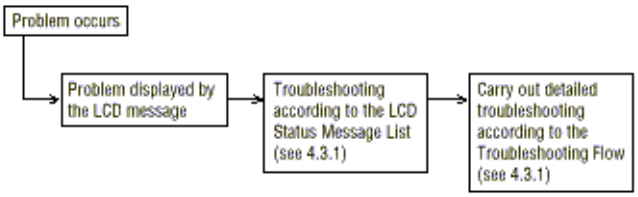

Copyright 1997, Okidata, Division of OKI America, Inc. All rights reserved. See the OKIDATA Business Partner Exchange (BPX) for any updates to this material. (http://bpx.okidata.com)

Table 4-1 lists the statuses and problems displayed as LCD (Operator Panel) messages.

Classification	LCD Status Message	Description	Recovery method
Jamerror (feeding) *1	[redacted] PAPER MISFEED [FAX] REPLACE PAPER	Notifies of occurrence of jam while the paper is being fed from Second Paper Feeder.	• Check the paper in the Second Paper Feeder. Carry out the recovery printing by opening and closing the cover, and turn the error display off. • When the problem occurs frequently, go through the Troubleshooting.
Jam error (ejection)	[redacted] PAPER JAM [FAX] REPLACE PAPER	Notifies of occurrence of jam while the paper is being ejected from the 2nd Paper Feeder.	• Check the paper in the 2nd Paper Feeder. Carry out the recovery printing by opening and closing the cover, and turn the error display off.
Paper size error	[redacted] PAPER JAM [FAX] REPLACE PAPER	Notifies of incorrect size paper feeding from Second Paper Feeder.	• Check the paper in the Second Paper Feeder. Also check to see if there was a feeding of multiple sheets. Carry out the recovery printing by opening and closing the cover, and turn the error display off.
Tray paper out *2	[redacted] NO PAPER [FAX] REPLACE PAPER	Notifies of no paper state when both cassettes (1st and 2nd) has no recording paper.	• Load the paper in Second Paper Feeder.

*1: Indicates the same message on the display, when 1st or 2nd cassette becomes jam error (feeding).

*2: However, if 1st cassette has recording paper, LCD indicates the standby mode on the display and alarm message does not indicate.

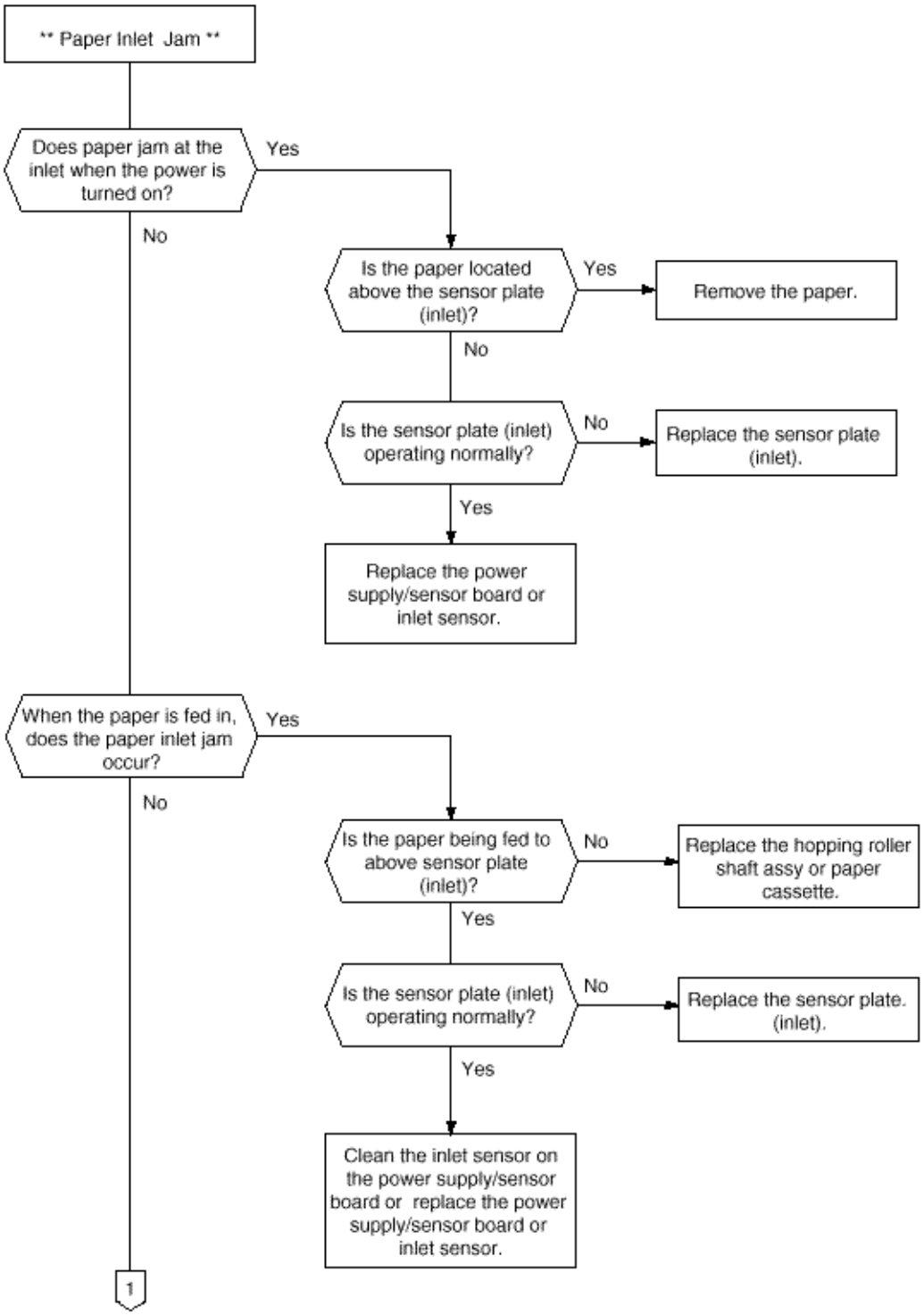
** Paper Inlet Jam **
Does paper jam at the inlet when the power is turned on?
Yes
No
Is the paper located above the sensor plate (inlet)?
Yes
Remove the paper.
No
Is the sensor plate (inlet) operating normally?
No
Replace the sensor plate (inlet).
Yes
Replace the power supply/sensor board or inlet sensor.
When the paper is fed in, does the paper inlet jam occur?
Yes
No
Is the paper being fed to above sensor plate (inlet)?
No
Replace the hopping roller shaft assy or paper cassette.
Yes
Is the sensor plate (inlet) operating normally?
No
Replace the sensor plate. (inlet).
Yes
Clean the inlet sensor on the power supply/sensor board or replace the power supply/sensor board or inlet sensor.
1

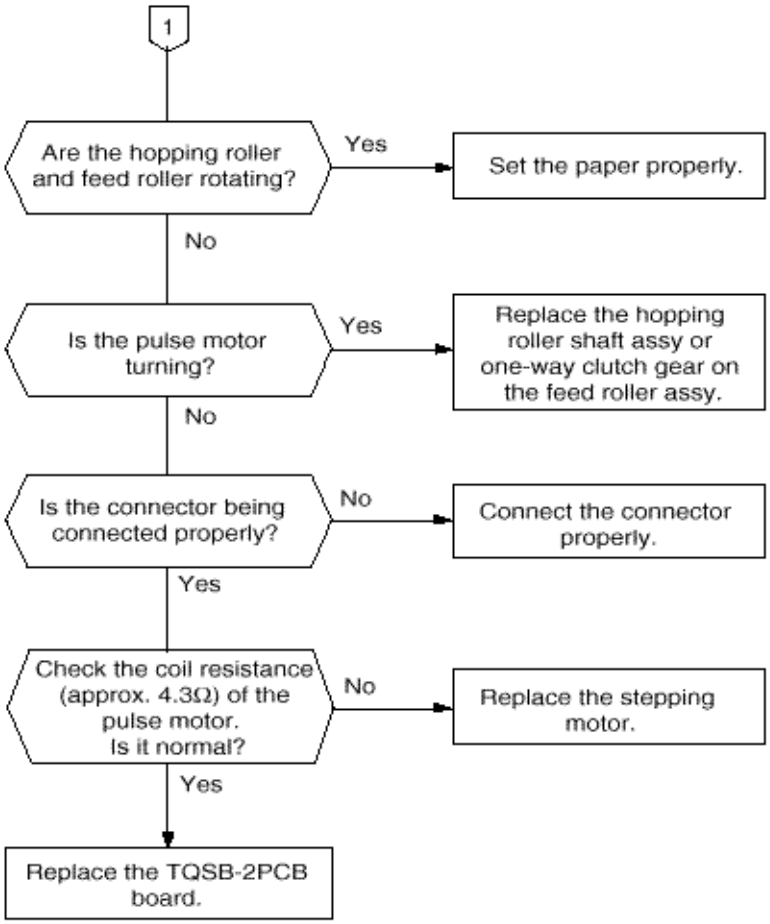

Copyright 1997, Okidata, Division of OKI America, Inc. All rights reserved. See the OKIDATA Business Partner Exchange (BPX) for any updates to this material. (http://bpx.okidata.com)

Service Manual for OF5300/5600

Chapter F Second Paper Feeder

5.1 Interconnection Diagram

5.2 PCB Layout

Copyright 1997, Okidata, Division of OKI America, Inc. All rights reserved. See the OKIDATA Business Partner Exchange (BPX) for any updates to this material. (http://bpx.okidata.com)

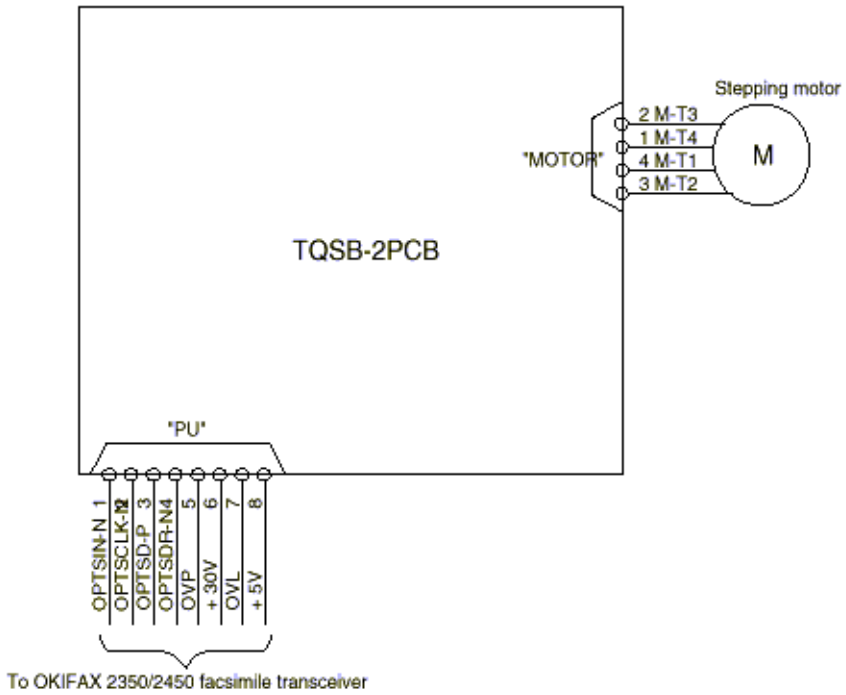

Copyright 1997, Okidata, Division of OKI America, Inc. All rights reserved. See the OKIDATA Business Partner Exchange (BPX) for any updates to this material. (http://bpx.okidata.com)

TQSB-2PCB

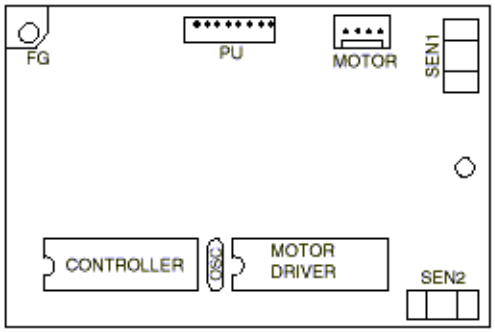

Copyright 1997, Okidata, Division of OKI America, Inc. All rights reserved. See the OKIDATA Business Partner Exchange (BPX) for any updates to this material. (http://bpx.okidata.com)

1: Cabinet and Cassette Assembly (Figure 6-1)

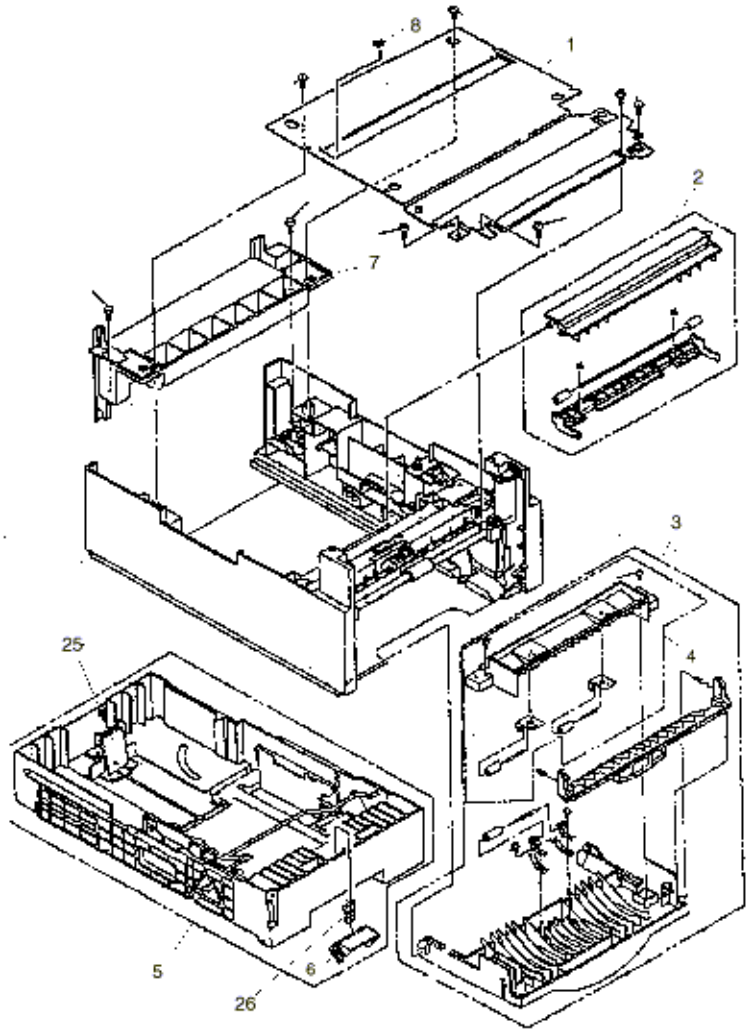

Figure 6-1

Paper Feeder (Table 6-1)

Rev.	No.	Oki parts Number	Description	Q'ty	Remarks
	1	1PP4122-1401P001	Plate: Upper	1	51023301
	2	3PA4122-1370G001	Guide: Sheet Assembly	1	50222001
	3	1PA4122-1369G001	Cover: Front Assembly	1	53075301

	4	3PA4122-1371G001	Guide: Inner Assembly	1	50221501
	5	1PA4122-1362G004	Cassette Assembly (2nd Tray)	1	50107304
	6	4PP4120-1009G001	Frame: Separation (F) Assembly	1	50222101
	7	1PP4122-1323P001	Cover: Rear	1	53075201
	8	4PB4122-1441P001	Ground: Stick Finger	1	51023401
	9	1PA4122-1366G001	Frame: Hopping Assembly	1	50222401
	10	4PP3522-3568P001	Bearing	1	51608901
	11	4PP4122-1207P001	Gear (Z70)	1	51239001
	12	3PP4122-1331P001	Sensor: Lever (P)	1	50414201
	13	3PA4122-1393G001	Roller: Feed Assembly	1	50222501
	14	3YS4111-3528P001	Cable & Connector	1	56633901
	15	3PB4122-1399P001	Motor: Pulse	1	56512201
	16	4PP4122-1384G001	Bracket	1	51712001
	17	4PP4122-1383P001	Gear (Z24)	2	51238901
	18	4PP4122-1226P001	Gear (Z87/Z60)	1	51239101
	19	2PP4122-1389P001	Plate: Bottom	1	51023201
	20b	1PA4122-1365G001	Guide: 2nd Cassette (L) Assembly	1	50222301
	21	3PA4122-1367G001	Roller: Hopping Assy 2nd Tray	1	50409501
	22	1YX4122-1364G002	Guide: 2nd Cassette (R) Assembly	1	50222201
	23	4PB4122-1382P001	Clutch: One-way 2nd Tray	1	51401101
	24	4YA4046-1651G002	TQSB-2 PCB	1	55078102
	25	3PA4122-1372G001	Tail Guide Assembly	1	
	26	4PP4122-1238P002	Spring: Separation	1	50927502 RSPL
	27	4PP4122-1184P001	Cassette Lock Lever	1	
	28	4PP4122-1347P001	Locks Spring	1	
	29	4PP4122-1217P001	Pull Block	1	

	30	4PP4122-1398P002	Sheet Spring	1	
	31	4PP4122-1339G001	Sheet Link (L)	1	
	32	4PP4122-1338G001	Sheet Link (R)	1	

2: Mechanical Assembly (Figure 6-2)

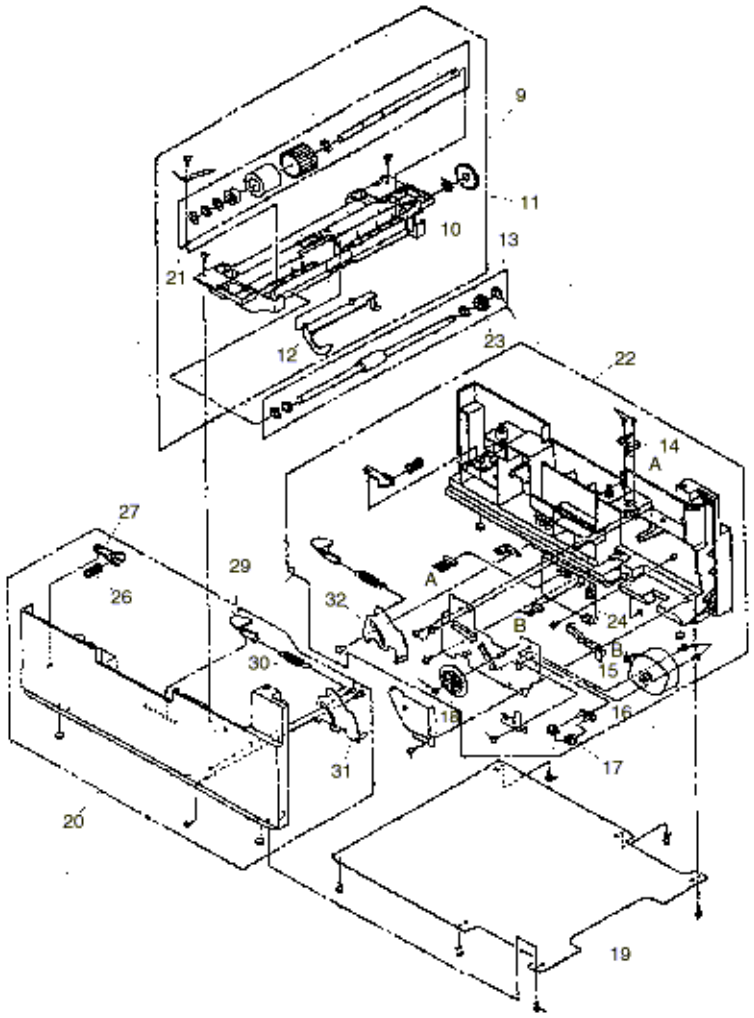

Rev.	No.	Oki parts Number	Description	Q'ty	Remarks
	1	1PP4122-1401P001	Plate: Upper	1	51023301
	2	3PA4122-1370G001	Guide: Sheet Assembly	1	50222001
	3	1PA4122-1369G001	Cover: Front Assembly	1	53075301
	4	3PA4122-1371G001	Guide: Inner Assembly	1	50221501
	5	1PA4122-1362G004	Cassette Assembly (2nd Tray)	1	50107304

	6	4PP4120-1009G001	Frame: Separation (F) Assembly	1	50222101
	7	1PP4122-1323P001	Cover: Rear	1	53075201
	8	4PB4122-1441P001	Ground: Stick Finger	1	51023401
	9	1PA4122-1366G001	Frame: Hopping Assembly	1	50222401
	10	4PP3522-3568P001	Bearing	1	51608901
	11	4PP4122-1207P001	Gear (Z70)	1	51239001
	12	3PP4122-1331P001	Sensor: Lever (P)	1	50414201
	13	3PA4122-1393G001	Roller: Feed Assembly	1	50222501
	14	3YS4111-3528P001	Cable & Connector	1	56633901
	15	3PB4122-1399P001	Motor: Pulse	1	56512201
	16	4PP4122-1384G001	Bracket	1	51712001
	17	4PP4122-1383P001	Gear (Z24)	2	51238901
	18	4PP4122-1226P001	Gear (Z87/Z60)	1	51239101
	19	2PP4122-1389P001	Plate: Bottom	1	51023201
	20b	1PA4122-1365G001	Guide: 2nd Cassette (L) Assembly	1	50222301
	21	3PA4122-1367G001	Roller: Hopping Assy 2nd Tray	1	50409501
	22	1YX4122-1364G002	Guide: 2nd Cassette (R) Assembly	1	50222201
	23	4PB4122-1382P001	Clutch: One-way 2nd Tray	1	51401101
	24	4YA4046-1651G002	TQSB-2 PCB	1	55078102
	25	3PA4122-1372G001	Tail Guide Assembly	1	
	26	4PP4122-1238P002	Spring: Separation	1	50927502 RSPL
	27	4PP4122-1184P001	Cassette Lock Lever	1	
	28	4PP4122-1347P001	Locks Spring	1	
	29	4PP4122-1217P001	Pull Block	1	
	30	4PP4122-1398P002	Sheet Spring	1	
	31	4PP4122-1339G001	Sheet Link (L)	1	

	32	4PP4122-1338G001	Sheet Link (R)	1	

Copyright 1997, Okidata, Division of OKI America, Inc. All rights reserved. See the OKIDATA Business Partner Exchange (BPX) for any updates to this material. (http://bpx.okidata.com)

All RMCS stands for the Remote Management Center System. RMCS refers to setting registration data and conducting the following types of maintenance operations from a remote location. (Refer to Figure 1)

The purpose of this system is to speed up customer service and reduce maintenance costs.

RMCS model for FX050 series is only Model 20.

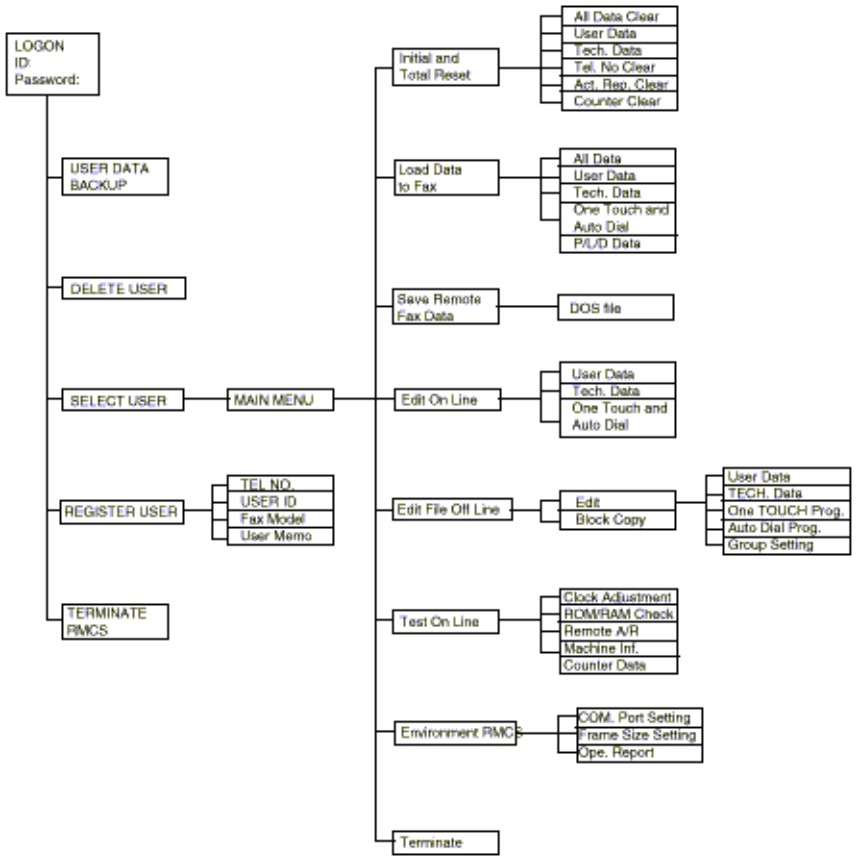

Figure 1 Remote Management Center System (RMCS)

Copyright 1997, Okidata, Division of OKI America, Inc. All rights reserved. See the OKIDATA Business Partner Exchange (BPX) for any updates to this material. (http://bpx.okidata.com)

1.1 Identifying the Packaged Contents

1.2 Required Devices

1.3 Connectable Peripheral Equipment

Copyright 1997, Okidata, Division of OKI America, Inc. All rights reserved. See the OKIDATA Business Partner Exchange (BPX) for any updates to this material. (http://bpx.okidata.com)

Before using this system, the packaged contents with the package list. Contact your dealer if any component from the package.

Copyright 1997, Okidata, Division of OKI America, Inc. All rights reserved. See the OKIDATA Business Partner Exchange (BPX) for any updates to this material. (http://bpx.okidata.com)

The following devices and software are required to operate this system.

Personal computer	IBM PC/AT or compatible model
Internal memory	300KB or more
Extended memory	1MB or more
Fixed disk drive	20MB or more
Display	CGA/EGA/VGA type
FX-050 series facsimile	
PC-I/F card	P050 (Ver.PA2 or later)
RS-232C cable	25-pin female connector
Telephone line	Public telephone line or two-way local channel
Operating system	PC-DOS Ver.3.1 or later

This system requires ANSI.SYS for screen control.

Confirm the following line in the CONIG.SYS file, if not found please add to write the command.

DEVICE=C:¥DOS¥ANSI.SYS

This system uses EMS memory. In case of memory manager consisted of those EMM386.EXE or similar types is used by configuration without EMS function, you should remark it does not work.

EXP.: DEVICE=C:¥DOS¥EMM386.EXE NOEMS

Cannot use in settings of the COM port which connect to PC-I/F excluding default.

Comx	SERIAL PORT START ADDRESS	SERIAL PORT END ADDRESS	IRQ
COM1	3F8	3FF	IRQ4
COM2	2F8	2FF	IRQ3
COM3	3E8	3EF	IRQ4
COM4	2E8	2EF	IRQ3

Copyright 1997, Okidata, Division of OKI America, Inc. All rights reserved. See the OKIDATA Business Partner Exchange (BPX) for any updates to this material. (http://bpx.okidata.com)

Printer	
Mouse	Microsoft mouse or equivalent
Telephone	

To use a mouse, a mouse driver program is required. This program is automatically incorporated by the installation program.

Copyright 1997, Okidata, Division of OKI America, Inc. All rights reserved. See the OKIDATA Business Partner Exchange (BPX) for any updates to this material. (http://bpx.okidata.com)

2.1 Mounting

2.1.1 Mounting Procedures

2.2 Installation

2.2.1 Registering the RMCS Basic System

2.2.2 Registering the Facsimile Model No.

2.2.3 Deleting the Facsimile Model No.

2.2.4 Updating the Password

2.2.5 Updating the Dip Switches

2.2.6 Deleting the RMCS Basic Switches

Copyright 1997, Okidata, Division of OKI America, Inc. All rights reserved. See the OKIDATA Business Partner Exchange (BPX) for any updates to this material. (http://bpx.okidata.com)

Conceptual connection diagram of RMCS with other devices

This system (RMCS Model 20) is used FX050 series Facsimile with PC-I/F.

Conceptual connection diagram of RMCS Model 20 with other devices

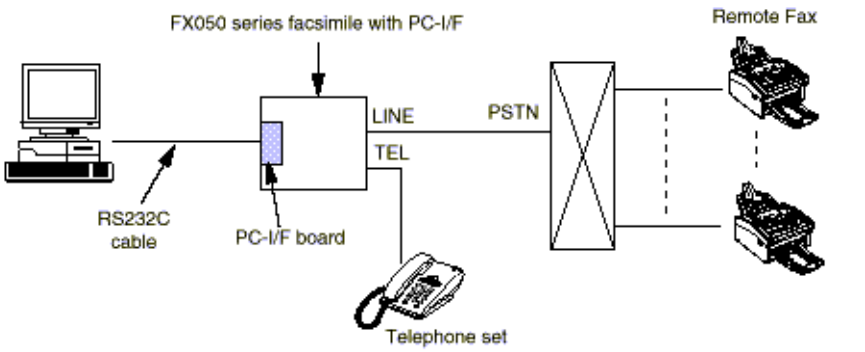

No problem is caused for the basic operation of this system even if no telephone set connected.

Copyright 1997, Okidata, Division of OKI America, Inc. All rights reserved. See the OKIDATA Business Partner Exchange (BPX) for any updates to this material. (http://bpx.okidata.com)

1) Before operation, disconnect the power plug of the IBM PC/AT from the system plug socket.

2) Disconnect the power plug of FX050 series Facsimile, too and set PC-I/F board to the Facsimile.

3) Connect RS232C cable between COM. Port of the IBM PC/AT and PC-I/F board of the Fac-simile.

4) Connect the power plug of the IBM PC/AT and the Facsimile and turn their power switch on.

Copyright 1997, Okidata, Division of OKI America, Inc. All rights reserved. See the OKIDATA Business Partner Exchange (BPX) for any updates to this material. (http://bpx.okidata.com)

When the PC/AT is activated by using the hard disk, insert an RMCS system disk into drive A. When C>_ is displayed, enter commands as shown below to activate the installation program.

C> A:[Enter]
A> INST[Enter]

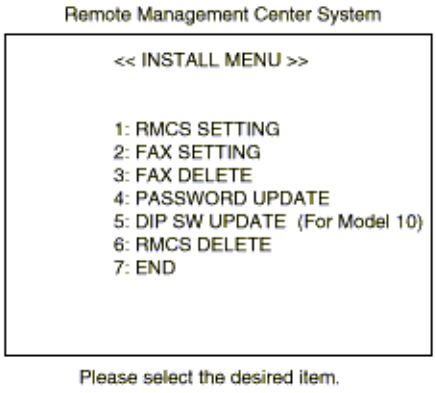

Select processing with the numeric keypad.

[1] Register the RMCS basic system.

[2] Register the facsimile model number.

[3] Delete the facsimile model number.

[4] Update the password.

[5] Update the dip switches.

[6] Delete the RMCS basic system.

[7] End of the Menu.

Each processing from [1] to [6] is described later.

Copyright 1997, Okidata, Division of OKI America, Inc. All rights reserved. See the OKIDATA Business Partner Exchange (BPX) for any updates to this material. (http://bpx.okidata.com)

The flow of new registration is different from that of updating. First, the flow of new registration is described below.

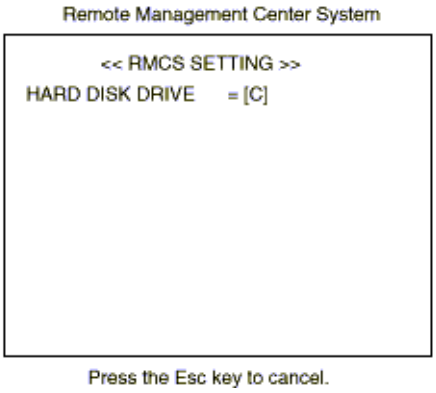

1) Enter the drive No. used to register the system.

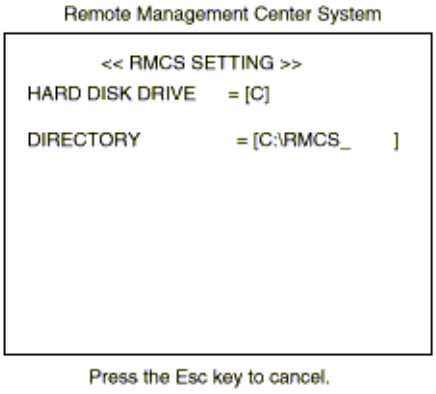

2) Enter the directory name with up to eight alphanumeric characters.

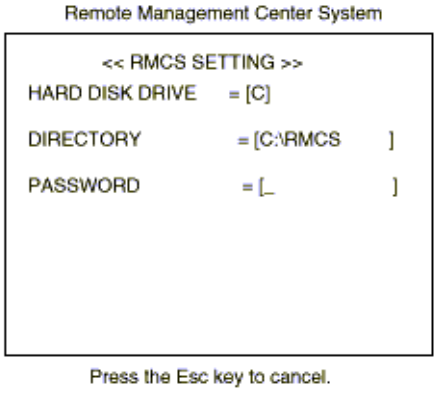

3) Register a password of up to 15 alphanumeric characters excluding [\],["]. If the system operator is not

defined, password registration not required.

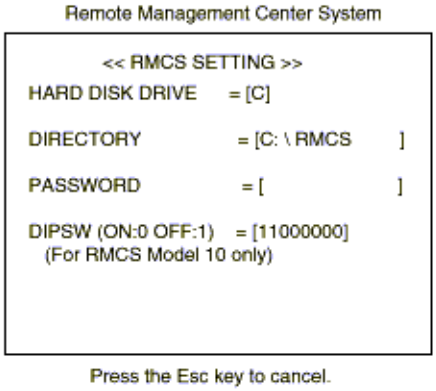

4) When you use RMCS Model 10, set the dip switches on the RMCS card. Normally, you need only press [Enter]. When an other extension slot and conflicting address space are being used, change the address space with the dip switches, then set the contents by using 1 and 0. When you use RMCS Model 20, you need only press [Enter].

OFF corresponds to 1 and ON to 0. Therefore set the dip switches to 11000000 in the following case.

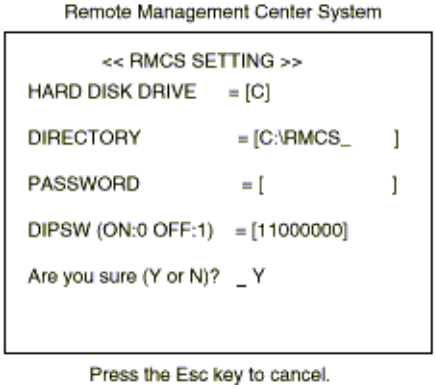

5) When the setting is correct, enter [Y]. The system is now registered. If not correct, enter [N]. Then repeat from step 1) again.

When registering the system, also register ANSI.SYS required for screen control and MOUSE.SYS for using the mouse.

If RMCS is already set in the IBM PC/AT, RMCS SETTING MENU is displayed as below.

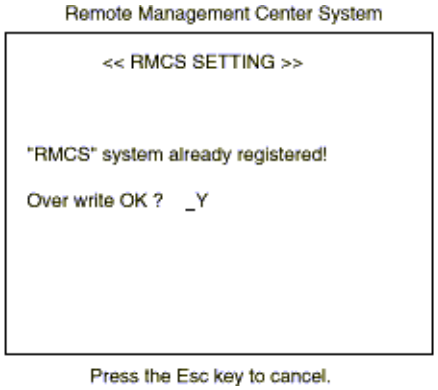

6) When updating, enter [Y]. Then updating status. When not updating, enter [N].

Copyright 1997, Okidata, Division of OKI America, Inc. All rights reserved. See the OKIDATA Business Partner Exchange (BPX) for any updates to this material. (http://bpx.okidata.com)

1) Search the directory in which the system is registered. When the system is found, register the model number.

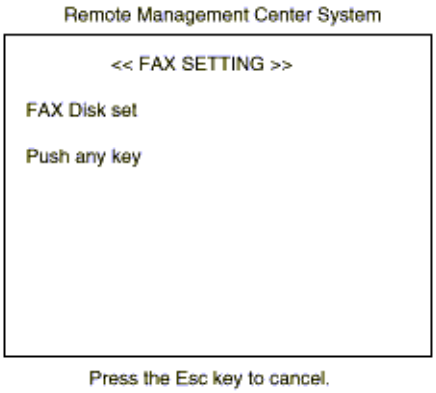

2) Insert a disk corresponding to the model into drive A, then press any key. The model number is displayed and the confirmation screen is displayed.

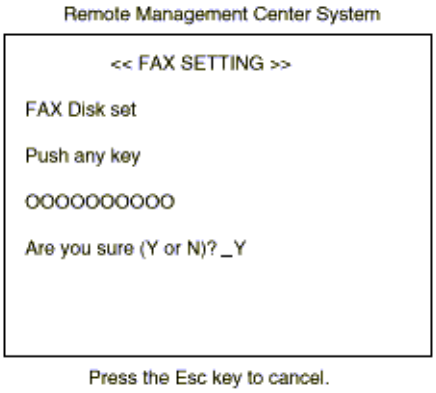

3) When the model number to be registered is correct, enter [Y]. The program corresponding to the model number is now registered. If not correct, enter [N]. Then repeat from step 1) again.

Copyright 1997, Okidata, Division of OKI America, Inc. All rights reserved. See the OKIDATA Business Partner Exchange (BPX) for any updates to this material. (http://bpx.okidata.com)

1) Search the directory in which the system is registered. When the system is found, a list of registered models is displayed.

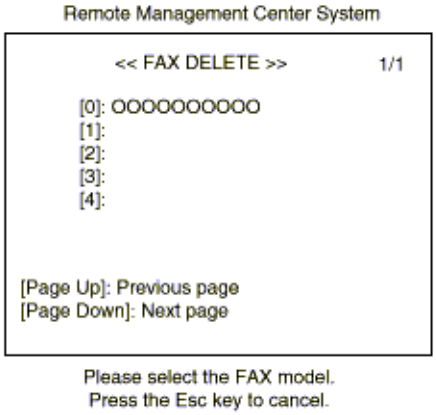

2) Select the model number to be deleted. This number is then displayed in inverse video. The confirmation screen is also displayed.

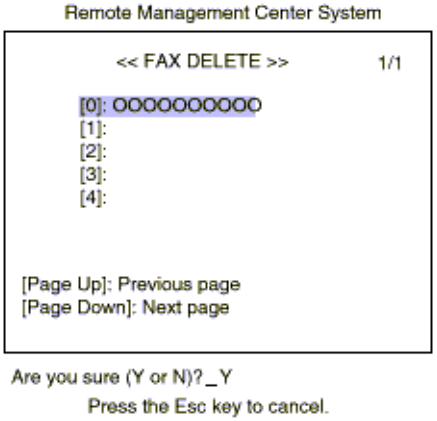

3) When the model number deleted is correct, enter [Y]. The program corresponding to the model number is now deleted. If not correct, enter [N]. Then repeat from step 1) again.

Copyright 1997, Okidata, Division of OKI America, Inc. All rights reserved. See the OKIDATA Business Partner Exchange (BPX) for any updates to this material. (http://bpx.okidata.com)

1) Search the directory in which the system is registered. When the system is found, the old password is displayed on the screen requesting entry of a new password is displayed.

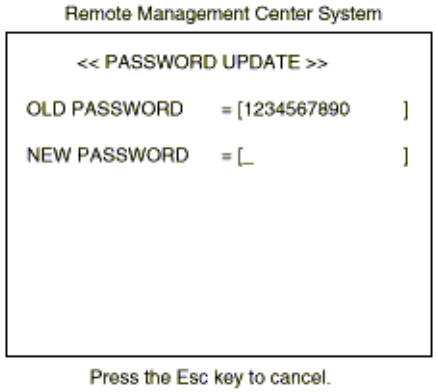

2) Register a new password of up to 15 alphanumeric characters excluding [\], ["]. Press [Enter] to display the confirmation screen.

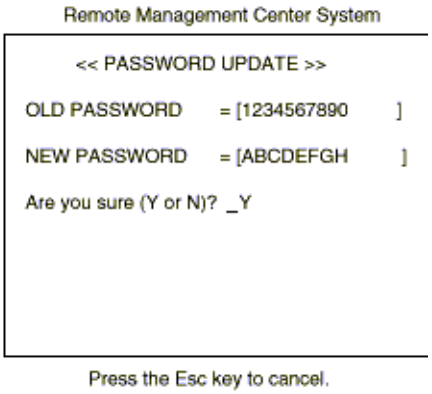

3) When the setting is correct, enter [Y]. The password is now updated. If not correct, enter [N]. Then repeat from step 1) again. If the system operator does not define the PASSWORD, PASSWORD is not checked when RMCS starting.

Copyright 1997, Okidata, Division of OKI America, Inc. All rights reserved. See the OKIDATA Business Partner Exchange (BPX) for any updates to this material. (http://bpx.okidata.com)

This setting is available for only RMCS Model 10.

1) Search the directory in which the system is registered. When the system is found, the dip switch setting is displayed.

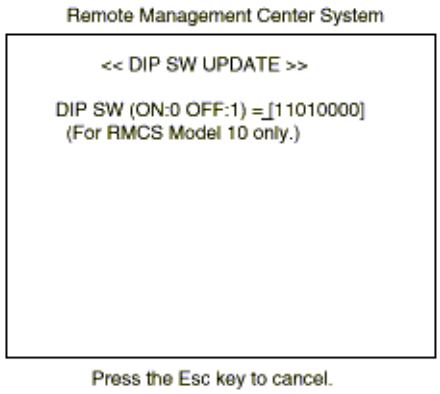

For the detail of setting, refer to 2.2.1.

After setting is completed, press [Enter]. Then the screen for verification is displayed.

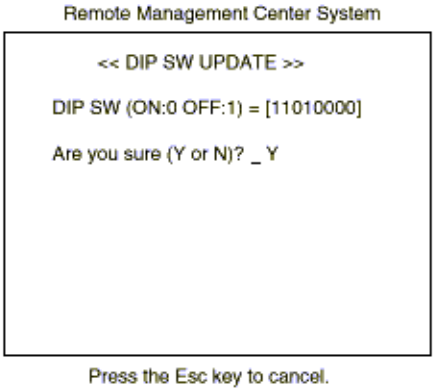

3) When the setting is corrected, enter [Y]. The dip switches are now updated. If not correct, enter [N]. Then repeat from step 1) again.

Copyright 1997, Okidata, Division of OKI America, Inc. All rights reserved. See the OKIDATA Business Partner Exchange (BPX) for any updates to this material. (http://bpx.okidata.com)

1) When to delete, enter [Y], then whole RMCS system is deleted. When not to delete, enter [N]. Then the installation menu appears.

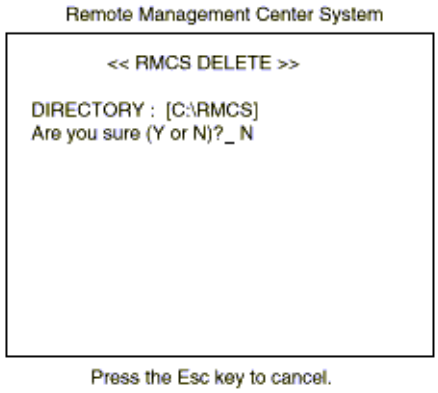

Copyright 1997, Okidata, Division of OKI America, Inc. All rights reserved. See the OKIDATA Business Partner Exchange (BPX) for any updates to this material. (http://bpx.okidata.com)

Service Manual for OF5300/5600

Chapter G RMCS System

3.1 Activating and Terminating the system

3.1.1 To Activate

3.1.2 Entering the ID and Password

3.2 TEL Directory

3.2.1 To Terminate

3.2.2 Selecting Destination Drive

3.3 Main Menu

3.4 Environment Setting

Copyright 1997, Okidata, Division of OKI America, Inc. All rights reserved. See the OKIDATA Business Partner Exchange (BPX) for any updates to this material. (http://bpx.okidata.com)

Before Activating the system

If the facsimile terminal is equipped with a selector function to "enable" or "unable" remote maintenance, set to "enable" in advance.

Copyright 1997, Okidata, Division of OKI America, Inc. All rights reserved. See the OKIDATA Business Partner Exchange (BPX) for any updates to this material. (http://bpx.okidata.com)

Enter the following command in the PC-DOS command input state.

C>RMCS

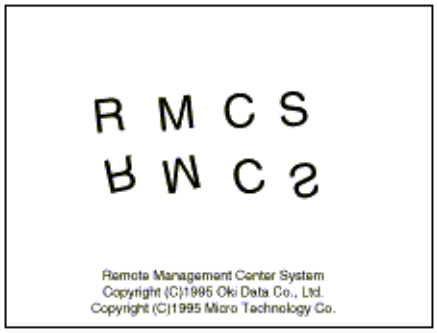

After completing the necessary preparations, the ID and password entry screen is displayed.

Copyright 1997, Okidata, Division of OKI America, Inc. All rights reserved. See the OKIDATA Business Partner Exchange (BPX) for any updates to this material. (http://bpx.okidata.com)

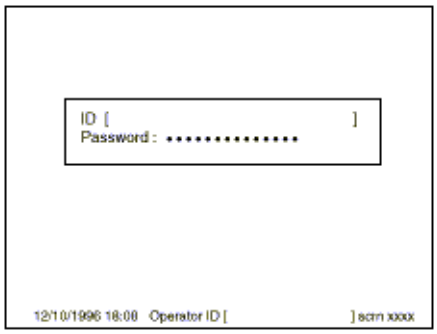

The ID is recorded in the operation report as part of the system operator history. Enter up to 50 alphanumeric characters except ["], [\] for the ID.

Enter the password registered at installation. When the correct password is entered. TEL Directory menu screen is displayed.

If you enter wrong password three times, ID and password entry screen is closed and return to the PC-DOS command input state.

Copyright 1997, Okidata, Division of OKI America, Inc. All rights reserved. See the OKIDATA Business Partner Exchange (BPX) for any updates to this material. (http://bpx.okidata.com)

You can select such services (items) registration and deletion of information related to users. We describe the detail of each service later.

There are two ways to specify an item: select by using the up arrow key and the down arrow key, then press [Enter] or enter the number before the item.

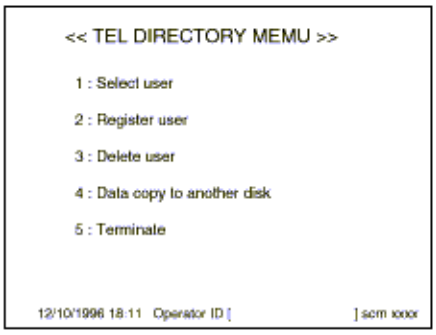

Copyright 1997, Okidata, Division of OKI America, Inc. All rights reserved. See the OKIDATA Business Partner Exchange (BPX) for any updates to this material. (http://bpx.okidata.com)

To terminate this system select "Terminate" on TEL directory menu screen or the main menu screen to return to PC-DOS.

Caution: After terminating remote management, restore the original facsimile terminal setting. (See to "Unable" remote diagnosis.)

Copyright 1997, Okidata, Division of OKI America, Inc. All rights reserved. See the OKIDATA Business Partner Exchange (BPX) for any updates to this material. (http://bpx.okidata.com)

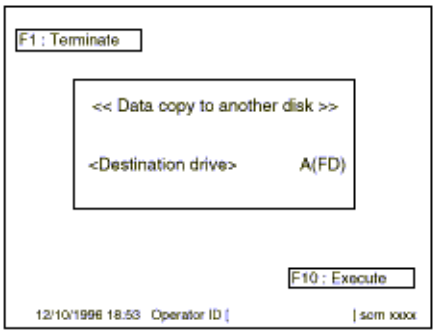

Now, select the destination drive. Press [Space] to change the drive name.

Select "Terminate" to stop processing and return to the TEL directory menu screen.

Select "Execute" to copy user information between the drives and return to the TEL directory menu screen.

Copyright 1997, Okidata, Division of OKI America, Inc. All rights reserved. See the OKIDATA Business Partner Exchange (BPX) for any updates to this material. (http://bpx.okidata.com)

The main menu screen varies according to FAX models. For further operation, refer to each FAX model manual.

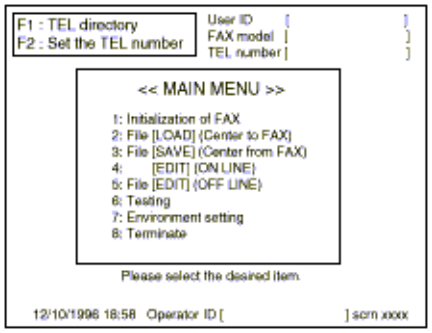

There are two ways to specify an item: select by using the [up arrow] and [down arrow] keys, then press [Enter] or enter the number before each item.

Detail on "Environment Setting" is described later.

Submenus can also be specified by using the function keys.

Press [F1] to return to TEL directory menu screen.

Press [F2] to display the TEL number setting screen when you want to change the number registered into the user information file temporarily.

Copyright 1997, Okidata, Division of OKI America, Inc. All rights reserved. See the OKIDATA Business Partner Exchange (BPX) for any updates to this material. (http://bpx.okidata.com)

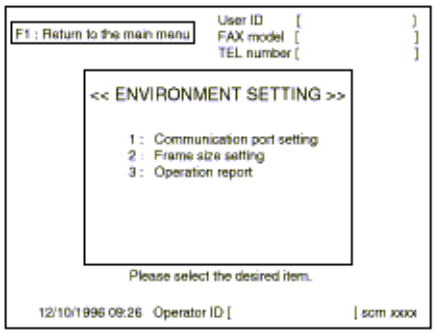

Selecting "ENVIRONMENT SETTING" on the main menu to display this screen.

Communication port setting:

Select communication port to connect the IBM PC/AT and PC-I/F.

Frame size setting:

Select a frame size for each frame to transfer TEL number data and program/language/default data during execution of File [LOAD] (Center to FAX) and [EDIT] (ON LINE).

Operation report:

The operation report displays the transmission status.

Press [F1] to return to the main menu screen.

Copyright 1997, Okidata, Division of OKI America, Inc. All rights reserved. See the OKIDATA Business Partner Exchange (BPX) for any updates to this material. (http://bpx.okidata.com)

4.1 Activating the Program

4.2 Modifying Message

4.2.1 File Selection

4.3 Saving Message

4.3.1 Confirmation

4.4 Loading Message

4.4.1 Confirmation

4.5 Other Message File

Copyright 1997, Okidata, Division of OKI America, Inc. All rights reserved. See the OKIDATA Business Partner Exchange (BPX) for any updates to this material. (http://bpx.okidata.com)

After activating the PC/AT with a hard disk, insert the RMCS system disk into drive A.

When C>_ is displayed, enter the following commands to activate the program.

C>A:[Enter]

A> SCRNED [Enter]

Then the screen for menu selection is displayed.

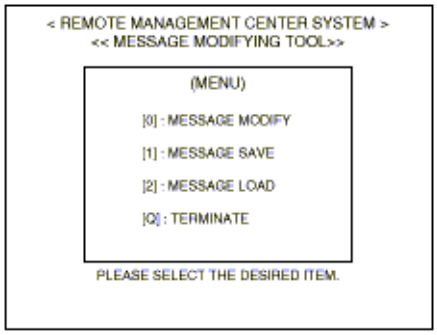

- Press [0] - [2] to display a screen for FAX model selection of each service.
- Press [Q] to terminate the program and return to PC-DOS.

Copyright 1997, Okidata, Division of OKI America, Inc. All rights reserved. See the OKIDATA Business Partner Exchange (BPX) for any updates to this material. (http://bpx.okidata.com)

File selection:

Select "MESSAGE MODIFY" on the menu screen, then the following screen is displayed.

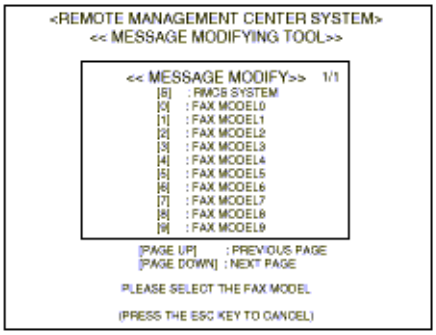

Enter the key No. indicated on the left of the model to modify. Then the screen for file selection is displayed.

- Press [Page Up] or [Page Down] to scroll the screen back to the previous page or up to the next page.
- Press [Esc] to terminate the FAX model selection and return to the menu screen.

Copyright 1997, Okidata, Division of OKI America, Inc. All rights reserved. See the OKIDATA Business Partner Exchange (BPX) for any updates to this material. (http://bpx.okidata.com)

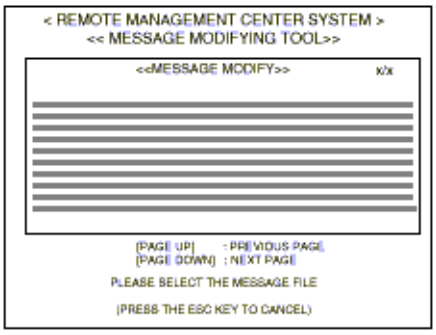

Select the message title to modify.

Select the position with [up arrow key], [down arrow key], [<---] and [--->] keys, and press the [Enter] key, then the position is selected.

- Press [Page Up] or [Page Down] to scroll the screen back to the previous page or up to the next page.
- Press [Esc] to terminate the title selection and return to the FAX model selection screen.

Copyright 1997, Okidata, Division of OKI America, Inc. All rights reserved. See the OKIDATA Business Partner Exchange (BPX) for any updates to this material. (http://bpx.okidata.com)

Model Selection:

Select "MESSAGE SAVE" on the menu screen. then the following screen is displayed.

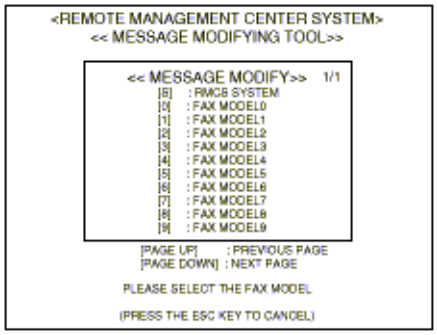

Enter the key number indicated on the left side of the model with messages to store.

- Press [Page Up] or [Page Down] to scroll the screen back to the previous page or up to the next page.
- Press [Esc] to terminate the FAX model selection and return to the menu screen.

Copyright 1997, Okidata, Division of OKI America, Inc. All rights reserved. See the OKIDATA Business Partner Exchange (BPX) for any updates to this material. (http://bpx.okidata.com)

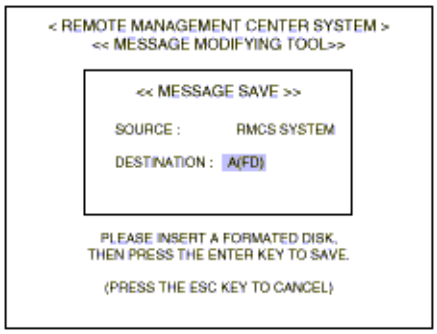

Select a drive with the [Space] key.

Since it is assumed that data is stored on a floppy disk, you can select drive A or drive B.

When setup is ready, insert a formatted floppy into the drive and press the [Enter] key, then saving is initiated.

- Press [Esc] to terminate saving message and return to the main menu screen.

Copyright 1997, Okidata, Division of OKI America, Inc. All rights reserved. See the OKIDATA Business Partner Exchange (BPX) for any updates to this material. (http://bpx.okidata.com)

Model Selection:

Select "MESSAGE LOAD" on the menu screen, the following screen is displayed.

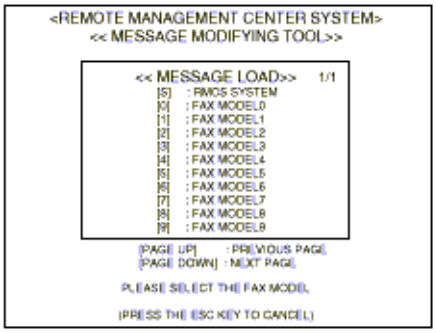

Enter the key number indicated on the left side of the model with a message reset.

- Press [Page Up] or [Page Down] to scroll the screen back to the previous page or up to the next page.
- Press [Esc] to terminate the FAX model selection and return to the menu screen.

Copyright 1997, Okidata, Division of OKI America, Inc. All rights reserved. See the OKIDATA Business Partner Exchange (BPX) for any updates to this material. (http://bpx.okidata.com)

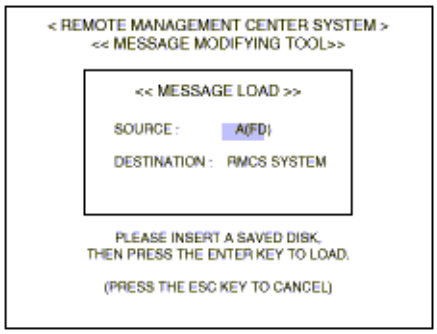

Select a drive with the [Space] key.

It is assumed that a message is loaded on the machine from the floppy disk, you can select drive A or drive B.

When setup is ready, insert a floppy disk which stores the message into the drive and press the [Enter] key.

- Press [Esc] to terminate loading message and return to the main menu screen.

Copyright 1997, Okidata, Division of OKI America, Inc. All rights reserved. See the OKIDATA Business Partner Exchange (BPX) for any updates to this material. (http://bpx.okidata.com)

In addition to the "scrn OOOO. lx" file, the following message files are available.

RMCS SYSTEM	
err_mess. tx	Error message text
rms_env. tx	Operator ID text
sc OOOO p. tx	Printing screen text
u_print. tx	Printing text
rms_env2. tx	New user text
online tx. tx	"ON LINE" text
inst. tx	install text

FAX MODEL	
sc OOOO p. tx	Printing screen text
online tx. tx	"ON LINE" text
scrnerr. tx	Error message text

Copyright 1997, Okidata, Division of OKI America, Inc. All rights reserved. See the OKIDATA Business Partner Exchange (BPX) for any updates to this material. (http://bpx.okidata.com)

Service Manual for OF5300/5600

Chapter H Product Service Bulletins

OKIDATA's Product Service Bulletins contain technical information obtained after product release.

Firmware updates, part number changes, and procedural changes are some of the subjects covered by these bulletins.

The Product Service Bulletins are distributed via OKIDATA's Web Site, Faxable Facts, and OKILINK II.

Use this section to store any hardcopy Product Service Bulletin information you obtain from these sources.

Copyright 1997, Okidata, Division of OKI America, Inc. All rights reserved. See the OKIDATA Business Partner Exchange (BPX) for any updates to this material. (http://bpx.okidata.com)

Service Manual for OF5300/5600

Chapter H Product Service Bulletins

OKIDATA's Web Site provides easy access to OKIDATA's product and service information. The Business Partner Exchange (BPX) provides Dealer-Only information to OKIDATA's sales and service providers. The information covers ALL OKIDATA products, and is constantly updated.

OKIDATA's Web Site address is: **www.okidata.com**

Copyright 1997, Okidata, Division of OKI America, Inc. All rights reserved. See the OKIDATA Business Partner Exchange (BPX) for any updates to this material. (http://bpx.okidata.com)

Service Manual for OF5300/5600

Chapter H Product Service Bulletins

OKIDATA's Faxable Facts is an automated fax document retrieval system. It is maintained by OKIDATA's Customer Service and Support Group. A wide variety of information is available through Faxable Facts. It is frequently updated.

You must use a touch-tone telephone to contact Faxable Facts, and have your fax number ready when you call. An automated attendant prompts you through using Faxable Facts.

The contact number for Faxable Facts is: **1-800-654-6651.**

Copyright 1997, Okidata, Division of OKI America, Inc. All rights reserved. See the OKIDATA Business Partner Exchange (BPX) for any updates to this material. (http://bpx.okidata.com)

OKILINK II is OKIDATA's Bulletin Board Service. This service is available to all OKIDATA Certified Service Technicians. OKILINK II provides additional troubleshooting and service information. Technicians can download files, ask questions of OKIDATA's technical support personnel, and participate in round table discussions about OKIDATA products and services.

Product Service Bulletins, Recommended Spare Parts Lists, Printer Drivers, Product Specifications, and Service Training Information are also available.

System Requirements for OKILINK II are listed below.

Asynchronous Communications Software set to:

8 Data Bits, No Parity, 1 Stop Bit

Asynchronous Modem

up to 9600 BPS w/error correction (MNP/V.42bis)

IBM Graphics/ANSI Terminal Emulation

The dial in number for **OKILINK II is 1-800-283-5474.**

Copyright 1997, Okidata, Division of OKI America, Inc. All rights reserved. See the OKIDATA Business Partner Exchange (BPX) for any updates to this material. (http://bpx.okidata.com)

Service Manual for OF5300/5600

Chapter I Recommended Spare Parts List (RSPL)

Recommended Spare Parts Lists (RSPL's) contain the current part numbers, descriptions, pricing, and stocking information for OKIDATA product spare parts.

The Recommended Spare Parts Lists are distributed via OKIDATA's Web site, Faxable Facts, and OKILINK II.

Use this section to store any hardcopy RSPL information you obtain from these sources.

Copyright 1997, Okidata, Division of OKI America, Inc. All rights reserved. See the OKIDATA Business Partner Exchange (BPX) for any updates to this material. (http://bpx.okidata.com)

Service Manual for OF5300/5600

Chapter I Recommended Spare Parts List (RSPL)

OKIDATA's Web Site provides easy access to OKIDATA's product and service information. The Business Partner Exchange (BPX) provides Dealer-Only information to OKIDATA's sales and service providers. The information covers ALL OKIDATA products, and is constantly updated.

OKIDATA's Web Site address is: **www.okidata.com**

Copyright 1997, Okidata, Division of OKI America, Inc. All rights reserved. See the OKIDATA Business Partner Exchange (BPX) for any updates to this material. (http://bpx.okidata.com)

OKIDATA's Faxable Facts is an automated fax document retrieval system. It is maintained by OKIDATA's Customer Service and Support Group. A wide variety of information is available through Faxable Facts. It is frequently updated.
You must use a touch-tone telephone to contact Faxable Facts, and have your fax number ready when you call. An automated attendant will prompt you through the steps in using Faxable Facts.

The contact number for Faxable Facts is: **1-800-654-6651.**

Copyright 1997, Okidata, Division of OKI America, Inc. All rights reserved. See the OKIDATA Business Partner Exchange (BPX) for any updates to this material. (http://bpx.okidata.com)

Service Manual for OF5300/5600

Chapter I Recommended Spare Parts List (RSPL)

OKILINK II is OKIDATA's Bulletin Board Service. This service is available to all OKIDATA Certified Service Technicians. OKILINK II provides additional troubleshooting and service information. Technicians can download files, ask questions of OKIDATA's technical support personnel, and participate in round table discussions about OKIDATA products and services.

Product Service Bulletins, Recommended Spare Parts Lists, Printer Drivers, Product Specifications, and Service Training Information are also available.

System Requirements for OKILINK II are listed below.

Asynchronous Communications Software set to:

8 Data Bits, No Parity, 1 Stop Bit

Asynchronous Modem

up to 9600 BPS w/error correction (MNP/V.42bis)

IBM Graphics/ANSI Terminal Emulation

The dial in number for **OKILINK II is 1-800-283-5474.**

Copyright 1997, Okidata, Division of OKI America, Inc. All rights reserved. See the OKIDATA Business Partner Exchange (BPX) for any updates to this material. (http://bpx.okidata.com)